FRESNO UNIFIED SCHOOL DISTRICT

BURROUGHS ELEMENTARY SCHOOL
EMS REPLACEMENT
166 N. SIERRA VISTA AVE.
FRESNO, CALIFORNIA 93702

OWNER
FRESNO □NIFIED SCHOOL DISTRICT
4600 N. BRA□ LEY AVE.
FRESNO, CA 93722
(559) 457-3064
CONTACT: DANNY ANDERSON

MECHANICAL ENGINEER
LA□RENCE ENGINEERING GRO□P
7084 NORTH MAPLE AVE. S□ITE 101
FRESNO, CA 93720
(559) 431-0101
CONTACT: MI□E CANTELMI

ELECTRICAL ENGINEER
HARDIN-DAVIDSON ENGINEERING□INC.
356 POLLAS□ Y AVE. S□ITE 200
CLOVIS, CA 93612
(559) 323-4995
CONTACT: RICH HARDIN

GENERAL NOTES:

1. *ALL □ OR□ SHALL CONFORM TO 2019 EDITION TITLE 24□CALIFORNIA CODE OF REG□LATIONS (CCR).*
2. *CHANGE TO THE APPROVED DRA□ INGS AND SPECIFICATIONS SHALL BE MADE BY ADDENDA OR CONSTR□CTION CHANGE DOC□MENT (CCD) APPROVED BY DSA□AS RE□□IRED BY SECTION 4-338□PART 1□ TITLE 24□CCR.*
3. *A "DSA CERTIFIED" PROJECT INSPECTOR EMPLOYED BY THE DISTRICT (O□ NER) AND APPROVED BY DSA SHALL PROVIDE CONTIN□O□S INSPECTION OF THE □ OR□. THE D□TIES OF THE INSPECTOR ARE DEFINED IN SECTION 4-342□PART 1□TITLE 24□CCR. PROJECT RE□□IRES A CLASS 3 INSPECTOR.*
4. *A DSA ACCEPTED TESTING LABORATORY DIRECTLY EMPLOYED BY THE DISTRICT (O□ NER) SHALL COND□CT ALL THE RE□□IRED TESTS AND INSPECTIONS FOR THE PROJECT.*
5. *THE INTENT OF THESE DRA□ INGS AND SPECIFICATIONS IS THAT THE □ OR□ OF THE ALTERATION□REHABILITATION OR RECONSTR□CTION IS TO BE IN ACCORDANCE□ ITH TITLE 24□CCR. SHO□LD ANY E□ISTING CONDITIONS S□CH AS DETERIORATION OR NON-COMPLYING CONSTR□CTION BE DISCOVERED □ HICH IS NOT COVERED BY THE CONTRACT DOC□MENTS □ HEREIN THE FINISHED □ OR□ □ ILL NOT COMPLY □ ITH TITLE 24□CCR□ A CONSTR□CTION CHANGE DOC□MENT (CCD) □OR A SEPARATE SET OF PLANS AND SPECIFICATIONS□DETAILING AND SPECIFING THE RE□□IRED □ OR□ SHALL S□BMITTED TO AND APPROVED BY DSA BEFORE PROCEEDING □ ITH THE □ OR□. (SECTION 4-317(C)□PART 1□TITLE 24□CCR)*

PROJECT NOTES:

1. *PROVIDE ALL NE□ CONTROL □ IRE.*
2. *PROVIDE ALL NE□ ACT□ATORS. RET□RN E□ISTING ACT□ATORS TO DISTRICT.*
3. *PROVIDE A NE□ O□TSIDE AIR TEMPERAT□RE SENSOR AT EACH M□LTI-ZONE.*
4. *PROVIDE NE□ CONTROLS FOR ALL E□HA□ST FANS.*
5. *PROVIDE NE□ CONTROLS FOR E□TERIOR LIGHTING. REFER TO FLOOR PLAN SHEETS. MO□NT HARD□ ARE IN NE□ LOC□ABLE ENCLOS□RES.*
6. *PROGRAMMING SHALL BE IN THE CONTROLLERS AT THE □NIT□NOT THE FRONT END. THE FRONT END IS A MONITORING STAT□S□ON-OFF DEVICE ONLY.*
7. *□ IRING IN ATTICS SHALL BE S□PPORTED ON J-HOO□S. NO □IRING ON ROOF.*
8. *SALVAGE ALL CONTROL E□□IPMENT AND RET□RN TO O□ NER.*
9. *PROVIDE AND INSTALL A 20A/1P□D□PLE□ RECEPTACLE □ ITH CIRC□IT AND CIRC□IT BREA□ER FROM THE NEAREST 120 VOLT PANEL IS 80-FEET A□ AY FIELD LOCATE. PROVIDE PO□ ER CONNECTIONS TO EACH ENERGY MANAGEMENT RIB. REFER TO MECHANICAL/EMS PLANS FOR E□□IPMENT LOCATIONS.*

APPLICABLE CODES

2019 C□□□r□□□ Ad□□ □□□r□□□□ C□d□□ - CCR T□□□ 24□P□r□1
2019 C□□□r□□□ B□□d□□□ C□d□□ - CCR T□□□ 24□P□r□2
2019 C□□□r□□□ E□□□r□□□C□d□□ - CCR T□□□ 24□P□r□3
2019 C□□□r□□□ M□□□□□□□□C□d□□ - CCR T□□□ 24□P□r□4
2019 C□□□r□□□ P□□ □□□C□d□□ - CCR T□□□ 24□P□r□5
2019 C□□□r□□□ E□□r□□C□d□□ - CCR T□□□ 24□P□r□6
2019 C□□□r□□□ F□n□C□d□□ - CCR T□□□ 24□P□r□9
2019 E□□□□□□B□□d□□□C□d□□ - CCR T□□□ 24□P□r□10
2019 C□□□r□□□ Gr□□□C□d□□ - CCR T□□□ 24 P□r□11
2019 C□□□r□□□ R□□r□□□□C□d□□ - CCR T□□□ 24 P□r□12
T□□□ 19 CCR P□□□□S□□□□S□□□ F□□M□r□□□R□□□□□□□
2019 NFPA 72 □r F□□A□□ S□□□□.
CFC CH 33 F□n□S□□□□D□r□□ C□□□r□□□□ □□d D□□ □□□□□

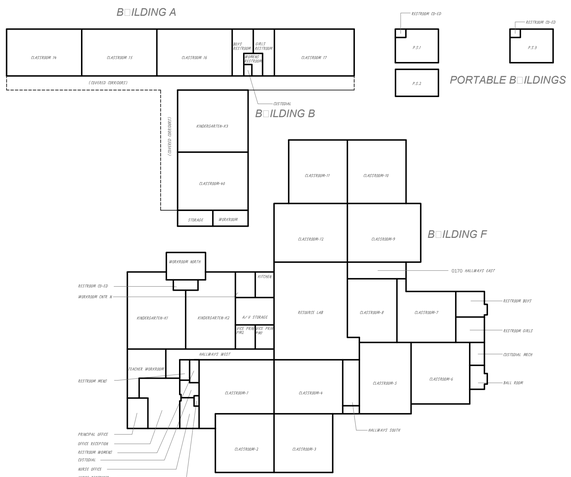

BLDG SITE PLAN

SCALE: 1" = 60'-0"

SHEET INDE□

MECHANICAL		SHEET CO□NT
G1	COVER SHEET	1
M1	BLDG A □ B EMS PLAN	2
M2	BLDG F EMS PLAN	3
M3	BLDG C□D□□E EMS PLAN	4
M4	PORTABLE B□ILDINGS	5
M5	ENERGY MANAGEMENT DETAILS	6
M6	ENERGY MANAGEMENT DETAILS	7
M7	ENERGY MANAGEMENT DETAILS	8
M8	ENERGY MANAGEMENT DETAILS	9
M9	ENERGY MANAGEMENT DETAILS	10
ELECTRICAL		
E-1	ELECTRICAL SYMBOLS AND NOTES	11
E-2	ELECTRICAL PLANS	12
SHEET CO□NT TOTAL:		13

SCOPE OF □ OR□

THE SCOPE OF WORK IS AS INDICATED BY THE CONTRACT DRAWINGS AND SPECIFICATION AND IS SUMMARIZED AS FOLLOWS:

- REPLACE EXISTING DDC CONTROLS w/(N) JOHNSON CONTROLS FX-80
- REPLACE AND UP SIZE EXISTING MULTI-ZONE UNIT SUPPLY AND RETURN / EXHAUST FAN WITH NEW MOTOR & VFD. SEE PLANS FOR SIZE & ELECTRICAL DRAWINGS.
- PROVIDE AN EXISTING CONDITION DUCT TRAVERSE FOR EACH SUPPLY ZONE, OUTSIDE AIR, & RETURN AIR ON MULTI-ZONE UNIT MZU-1, MZU-2, MZU-3 AND MZU-4 PRIOR TO START OF WORK AND ALSO UPON PROJECT COMPLETION.

APPROVALS:
APPLICATION # ??????????

REGISTERED PROFESSIONAL ENGINEER
MICHAEL D. CANTELMI
M23585
REN. 9-30-2021
MECHANICAL
STATE OF CALIFORNIA

DATE: 11-25-2020

EMS REPLACEMENT
BURROUGHS ELEMENTARY SCHOOL
166 N SIERRA VISTA AVE., FRESNO, CA 93702

FRESNO UNIFIED SCHOOL DISTRICT
4600 N. BRAWLEY AVE., FRESNO, CA.

REVISIONS

LAWRENCE ENGINEERING GROUP
Fresno, CA 93720
FAX (559) 431 3982
7084 N. Maple Ave., Suite 101
(559) 431-0101

TITLE: COVER

SHEET: G1

PROJECT 20140

17 March 2021 8:03 AM P:\2020\20140 FUSD Burroughs EMS Replacement\4 M\G1 – BLDG. SITE PLAN.dwg ezequiel

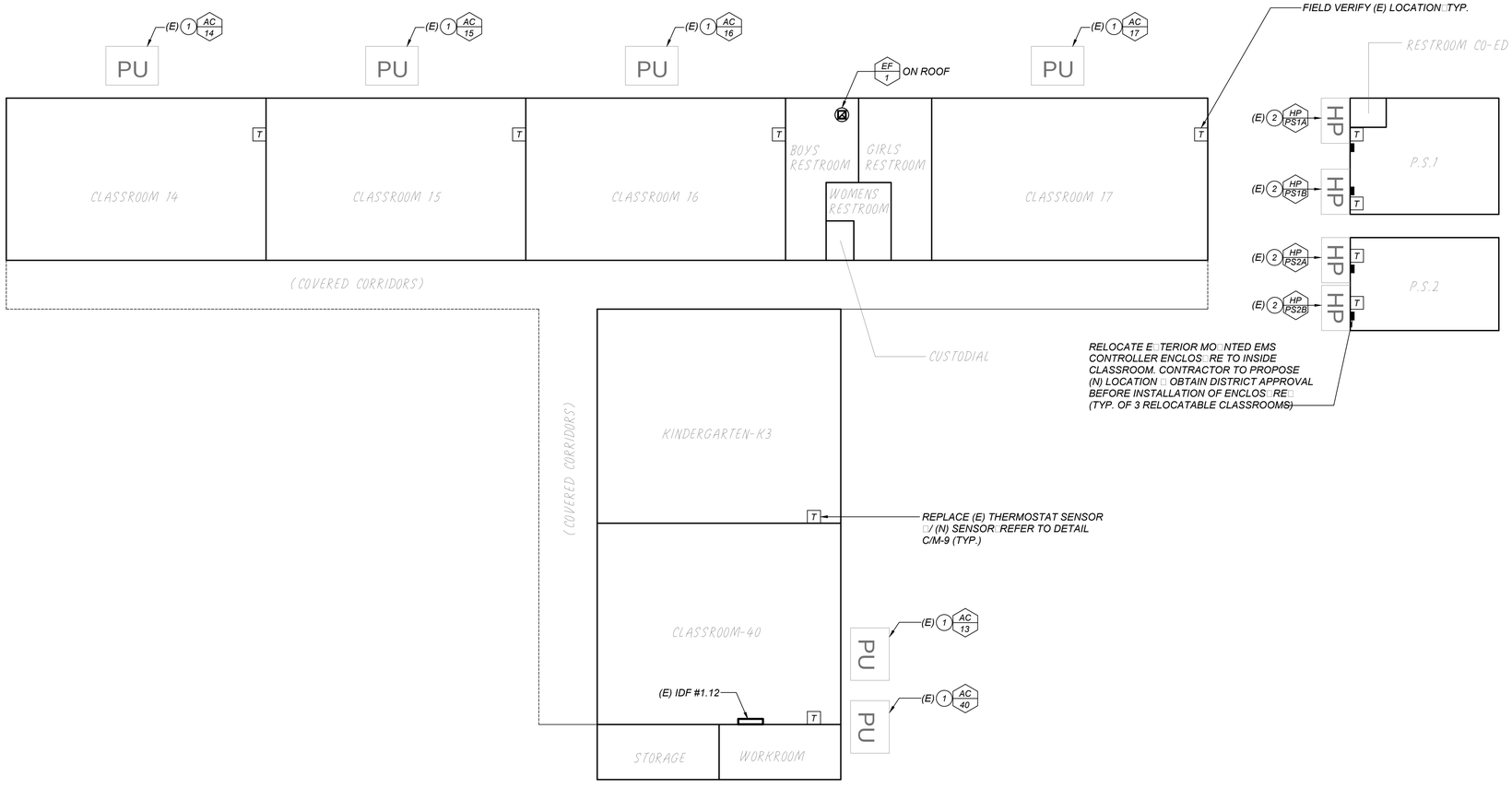

BLDG. A & BLDG. B EMS PLAN

SCALE: 1/16" = 1'-0"

KEYNOTES: (THIS SHEET ONLY)

1. H/C UNIT MOUNTED ON GRADE.
2. ALL MOUNTED HEAT PUMP.

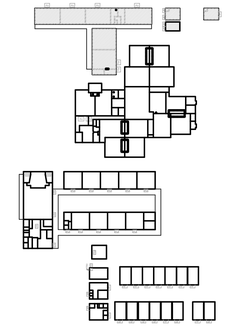

KEY PLAN

APPROVALS:

APPLICATION # ??????????

DATE: 11-25-2020

EMS REPLACEMENT
BURROUGHS ELEMENTARY SCHOOL
166 N SIERRA VISTA AVE. FRESNO, CA 93702

FRESNO UNIFIED SCHOOL DISTRICT
4600 N. BRAWLEY AVE. FRESNO, CA.

REVISIONS

LAWRENCE ENGINEERING GROUP
7984 N. Maple Ave., Suite 101
Fresno, CA 93720
(559) 431-0101
FAX (559) 431-1302

TITLE:
BLDG A & BLDG B
EMS
PLAN

SHEET: M1

PROJECT 20140

17 March 2021 8:03 AM P:\2020\20140 FUSD Burroughs EMS Replacement\4-Drawings\4 M\M1 - BLDG. A & BLDG B CLASSROOM PLAN.dwg ezequiel

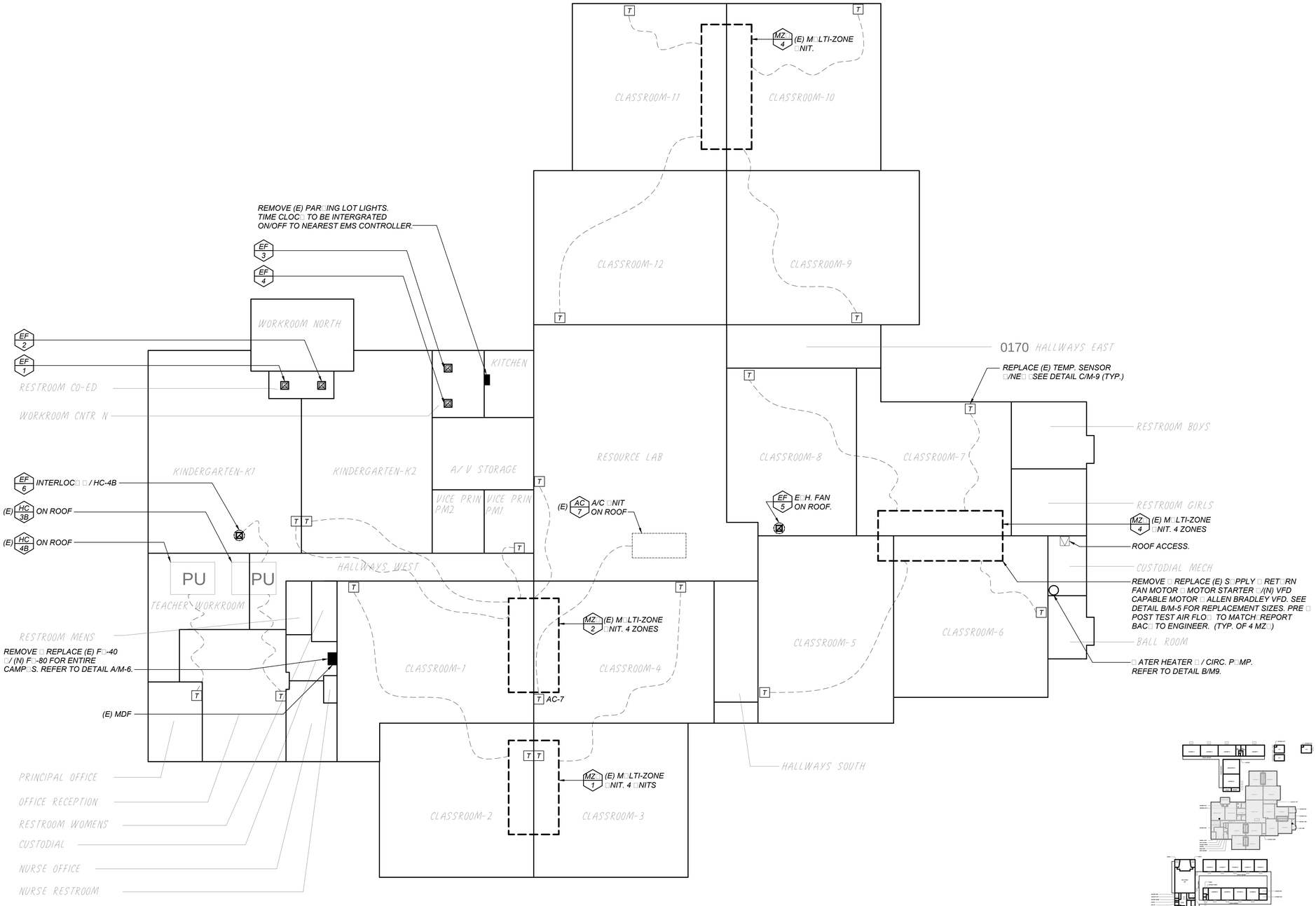

BLDG. F EMS PLAN

SCALE: 1/16" = 1'-0"

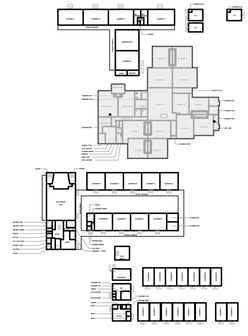

□EY PLAN

APPROVALS:

APPLICATION # ?????????

REGISTERED PROFESSIONAL ENGINEER MICHAEL D. CAMPBELL M23588 REN. 9-30-2021 MECHANICAL STATE OF CALIFORNIA

DATE: 11-25-2020

EMS REPLACEMENT
BURROUGHS ELEMENTARY SCHOOL
166 N SIERRA VISTA AVE. FRESNO, CA 93702

FRESNO UNIFIED SCHOOL DISTRICT
4600 N. BRAWLEY AVE. FRESNO, CA.

REVISIONS

LAWRENCE ENGINEERING GROUP
7084 N. Maple Ave., Suite 101
(559) 431-0101
Fresno, CA 93720
FAX (559) 431-1362

TITLE: BLDG F EMS PLAN

SHEET: M2

PROJECT 20140

17 March 2021 8:03 AM P:\2020\20140 FUSD Burroughs EMS Replacement\4-Drawings\4 M\M2 - BLDG. F CLASSROOM PLAN.dwg ezequiel

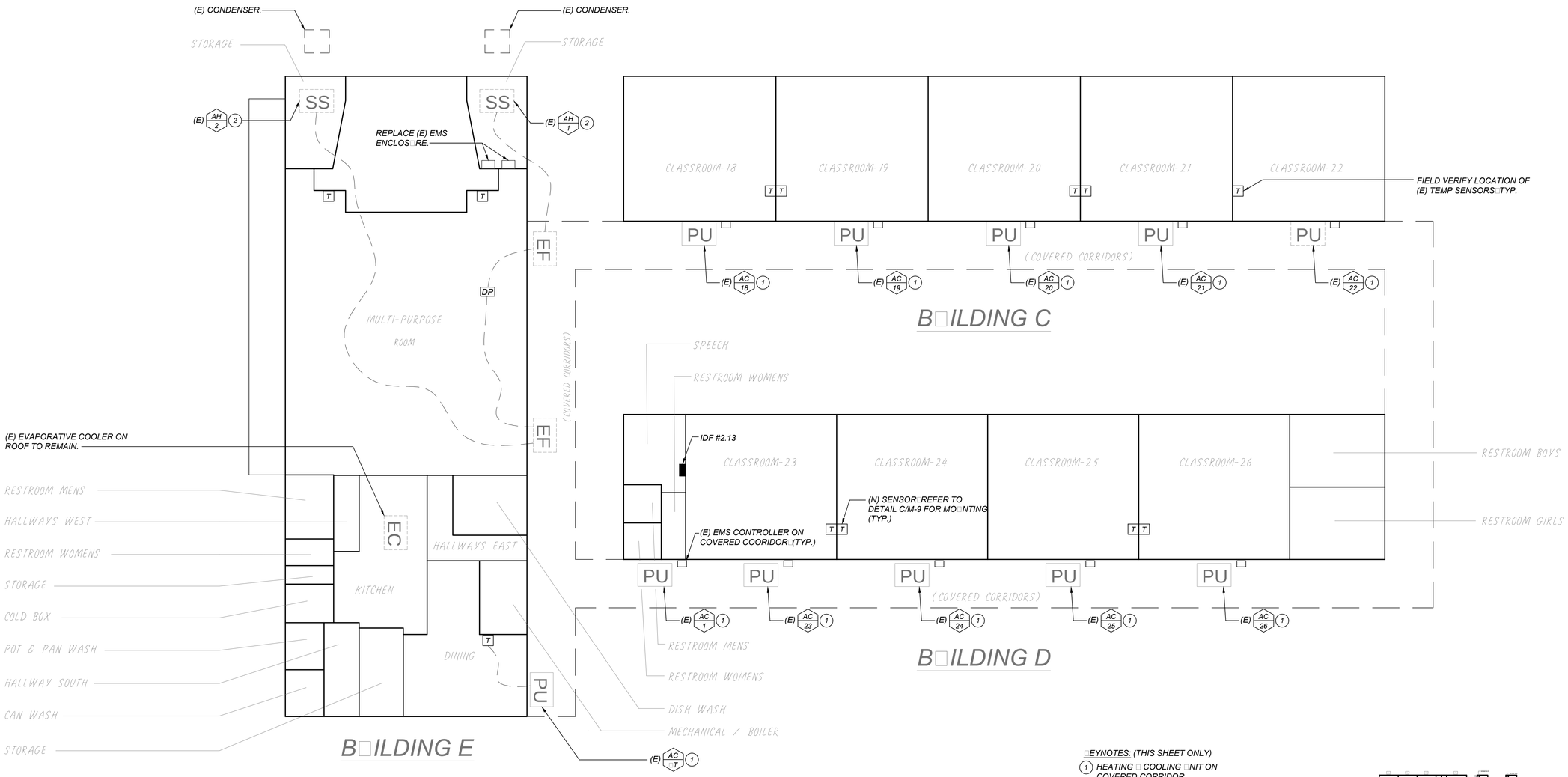

□EYNOTES: (THIS SHEET ONLY)

1. HEATING □ COOLING □NIT ON COVERED CORRIDOR.
2. SPLIT SYSTEM VERTICAL AIR HANDLER □/GAS F□RNACE□ D□ COOLING COIL □ AIR COOLED CONDENSER ON GRADE.
3. (E) E□HA□ST FANS CONTROLLED □/DIFERENTIAL PRESS□RE SENSOR. INTERLOC□ E□HA□ST ENABLE □/ AH-1 □ AH-2.

BLDG. C□D□□ E EMS PLAN

SCALE: 1/16" = 1'-0"

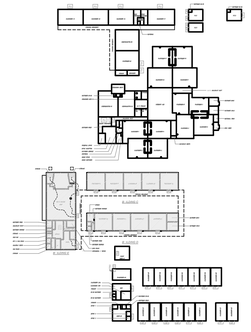

□EY PLAN

APPROVALS:

APPLICATION # ?????????

DATE: 11-25-2020

EMS REPLACEMENT
BURROUGHS ELEMENTARY SCHOOL
166 N SIERRA VISTA AVE. FRESNO, CA 93702

FRESNO UNIFIED SCHOOL DISTRICT
4600 N. BRAWLEY AVE. FRESNO, CA.

REVISIONS

LAWRENCE ENGINEERING GROUP
7084 N. Maple Ave., Suite 101
Fresno, CA 93720
(559) 431-0101
FAX (559) 431-1362

TITLE:
BLDG. C□D□□ E
EMS PLAN

SHEET:
M3

PROJECT 20140

17 March 2021 8:03 AM P:\2020\20140 FUSD Burroughs EMS Replacement\4-Drawings\4 M\M3 - BLDG. C, D & E.dwg ezequiel

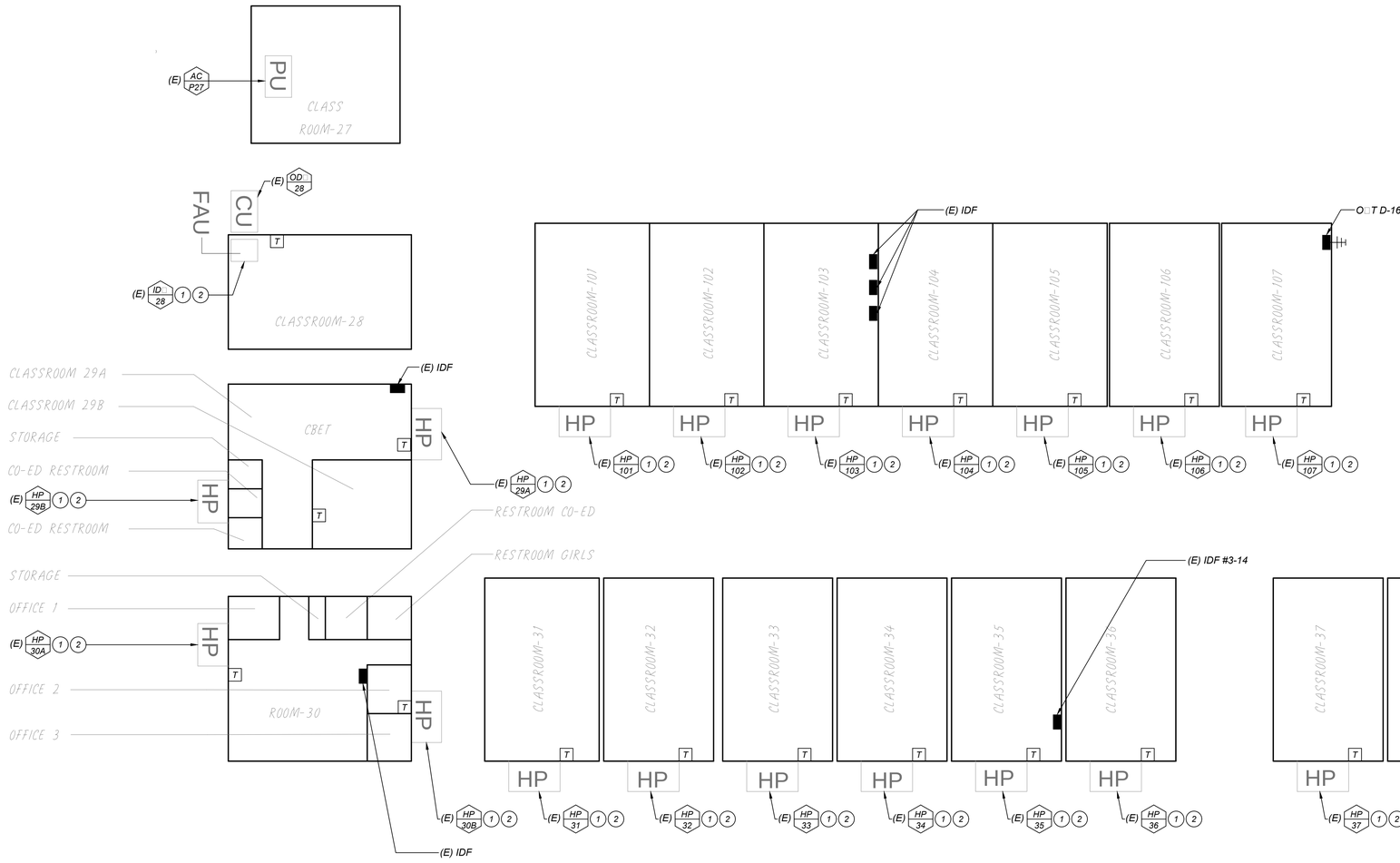

PORTABLE B□ILDINGS

SCALE: 1/16" = 1'-0"

□EYNOTES: (THIS SHEET ONLY)

1. □ ALL MO□NTED HEAT P□MP.
2. RELOCATE (E) E□TERIOR MO□NTED EMS ENCLOS□RE TO INSIDE CLASSROOM. PROPOSE (N) LOCATION □ OBTAIN DISTRICT APPROVAL BEFORE INSTALLATION.

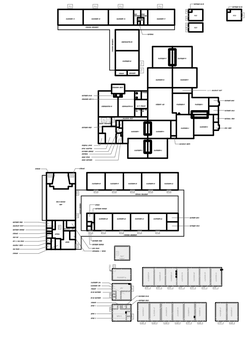

□EY PLAN

APPROVALS:

APPLICATION # ??????????

REGISTERED PROFESSIONAL ENGINEER MICHAEL D. CHRISTIAN M23585 REN. 9-30-2021 MECHANICAL STATE OF CALIFORNIA

DATE: 11-25-2020

EMS REPLACEMENT
BURROUGHS ELEMENTARY SCHOOL
166 N SIERRA VISTA AVE. FRESNO, CA 93702

FRESNO UNIFIED SCHOOL DISTRICT
4600 N. BRAWLEY AVE. FRESNO, CA.

REVISIONS

LAWRENCE ENGINEERING GROUP
7084 N. Maple Ave., Suite 101
Fresno, CA 93720
(559) 432-1001
FAX (559) 432-1562

TITLE: PORTABLE B□ILDINGS

SHEET: M4

PROJECT 20140

17 March 2021 8:04 AM P:\2020\20140 FUSD Burroughs EMS Replacement\4-Drawings\4 M\M4 - PARTIAL BLDG SITE PLAN.dwg ezequiel

JACE Notes

HOST ID:
SERIAL N□MBER:
PRIMARY IP: 192.168.1.149 (1)
SECONDARY IP: 192.168.10.10

Sheet Notes

(1) DEFA□LT IP ADDRESS TO BE CHANGED D□RING COMMISSIONING.

(2) IP ADDRESSES TO BE PROVIDED BY F□SD.

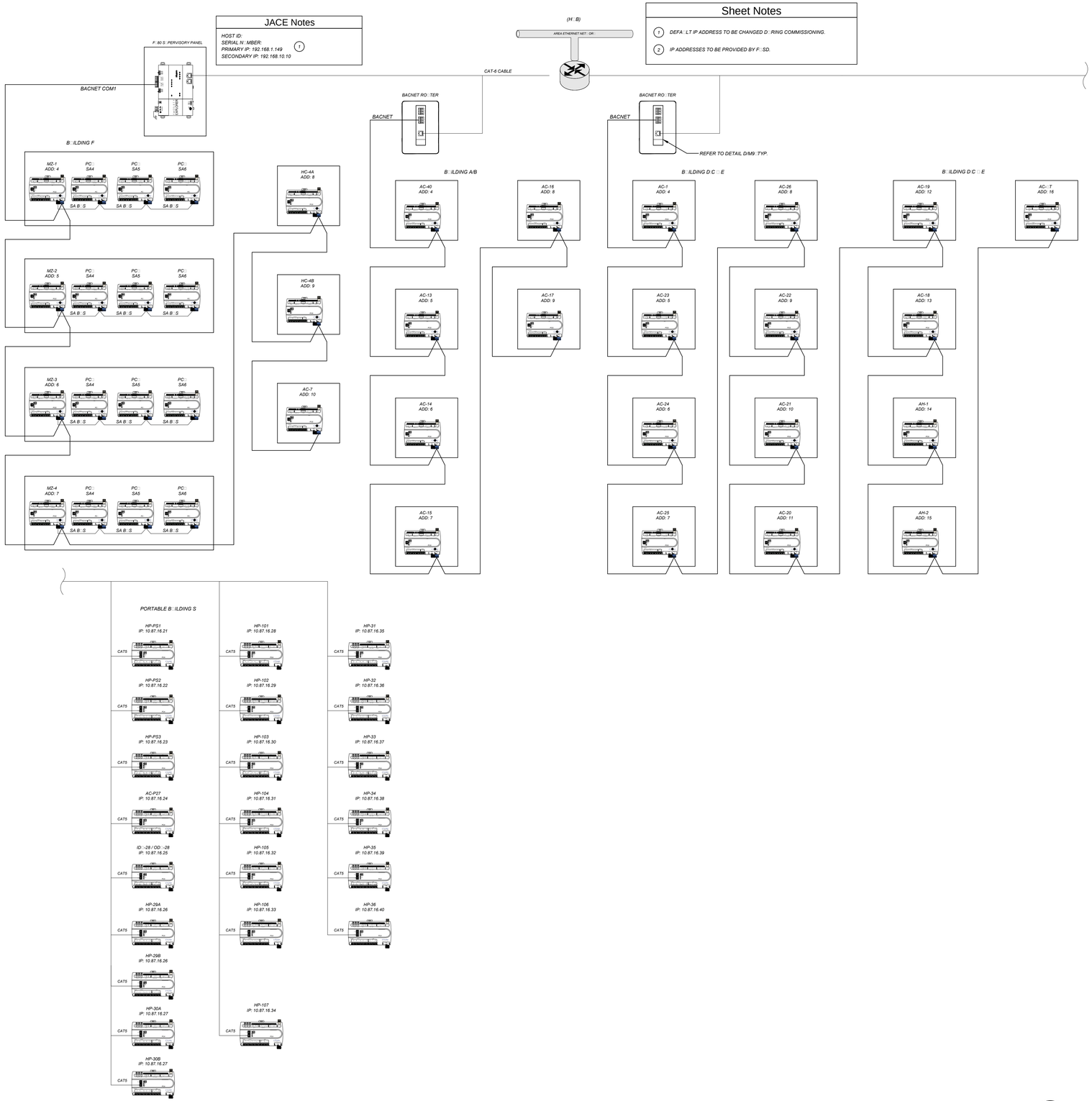

BURROUGHS ELEMENTARY SCHOOL CONTROL REFERENCES

Room Name	Room No.	A/C Mark No.	System Type	Description or Notes	See Detail
BUILDING A & B- CLASSROOMS					
Classroom	14	AC-14	G/E	Packaged Unit	B/M-7
Classroom	15	AC-15	G/E	Packaged Unit	B/M-7
Classroom	16	AC-16	G/E	Packaged Unit	B/M-7
Classroom	17	AC-17	G/E	Packaged Unit	B/M-7
		EF-1	R/R Exhaust Fan	Interlock with lights	A/M-10
Kindergarten	K3	AC-13	G/E	Packaged Unit	B/M-7
Classroom	40	AC-40	G/E	Packaged Unit	B/M-7
BUILDING C - CLASSROOM					
Classroom	18	AC-18	G/E	Rooftop Packaged Unit	B/M-7
Classroom	19	AC-19	G/E	Rooftop Packaged Unit	B/M-7
Classroom	20	AC-20	G/E	Rooftop Packaged Unit	B/M-7
Classroom	21	AC-21	G/E	Rooftop Packaged Unit	B/M-7
Classroom	22	AC-22	G/E	Rooftop Packaged Unit	B/M-7
BUILDING D - CLASSROOM					
Speech/Restrooms	1	AC-1	G/E	Rooftop Packaged Unit	B/M-7
Classroom	23	AC-23	G/E	Rooftop Packaged Unit	B/M-7
Classroom	24	AC-24	G/E	Rooftop Packaged Unit	B/M-7
Classroom	25	AC-25	G/E	Rooftop Packaged Unit	B/M-7
Classroom	26	AC-26	G/E	Rooftop Packaged Unit	B/M-7
BUILDING E - MULTI-PURPOSE					
Dining		AC-1	G/E	Floor Mounted Packaged Unit	B/M-7
Multi-purpose room		AH-1/AH-2	G/E	G/E split system	A/M-9
Multi-purpose room		EF-1/EF-2	Exhaust Fan	Exhaust Fan on Pressure sensor, Interlock operation with AH-1/AH-2	
BUILDING F - CLASSROOMS & ADMIN					
SEE PLANS		MZU-1	MZ AH	4 zones, (N) 10 HP SA & 1.5 HP EXH Fan Motor and VFD	C/M-6
SEE PLANS		MZU-2	MZ AH	4 zones, (N) 15 HP SA & 3 HP EXH. Fan Motor and VFD	C/M-6
SEE PLANS		MZU-3	MZ AH	4 zones, (N) 10 HP SA & 1.5 HP EXH. Fan Motor and VFD	C/M-6
SEE PLANS		MZU-4	MZ AH	4 zones, (N) 15 HP SA & 1.5 HP EXH Fan Motor and VFD	C/M-6
Administration		HC-3B	G/E	Rooftop Packaged Unit	B/M-7
Administration		HC-4B	G/E	Rooftop Packaged Unit	B/M-7
		EF-1	R/R Exhaust Fan	Leave on (E) Wall Switch	
		EF-2	R/R Exhaust Fan	Leave on (E) Wall Switch	
		EF-3	R/R Exhaust Fan	Leave on (E) Wall Switch	
		EF-4	R/R Exhaust Fan	Leave on (E) Wall Switch	
		EF-5	R/R Exhaust Fan	Interlock with MZU-4	
		EF-6	R/R Exhaust Fan	Interlock with HC-4B	
CLASSROOM	4	AC-7	G/E	Rooftop Packaged Unit	B/M-7
PORTABLE BUILDINGS					
CLASSROOM	27	AC-P27	G/E	Rooftop Packaged Unit	B/M-7
CLASSROOM	28	IDU-28, ODU-28	G/E	Vertical air handler w/ air cooled condenser	A/M-9
CLASSROOM	29A	HP-29A	Wall Mounted HP		C/M-9
CLASSROOM	29B	HP-29B	Wall Mounted HP		C/M-9
CLASSROOM	30A	HP-30A	Wall Mounted HP		C/M-9
CLASSROOM	30B	HP-30B	Wall Mounted HP		C/M-9
CLASSROOM	31	HP-31	Wall Mounted HP		C/M-9
CLASSROOM	32	HP-32	Wall Mounted HP		C/M-9
CLASSROOM	33	HP-33	Wall Mounted HP		C/M-9
CLASSROOM	34	HP-34	Wall Mounted HP		C/M-9
CLASSROOM	35	HP-35	Wall Mounted HP		C/M-9
CLASSROOM	36	HP-36	Wall Mounted HP		C/M-9
CLASSROOM	101	HP-101	Wall Mounted HP		C/M-9
CLASSROOM	102	HP-102	Wall Mounted HP		C/M-9
CLASSROOM	103	HP-103	Wall Mounted HP		C/M-9
CLASSROOM	104	HP-104	Wall Mounted HP		C/M-9
CLASSROOM	105	HP-105	Wall Mounted HP		C/M-9
CLASSROOM	106	HP-106	Wall Mounted HP		C/M-9
CLASSROOM	107	HP-107	Wall Mounted HP		C/M-9
SITE					
Exterior Lighting					F/M-9

NOTES:
1. System Type Abbreviations: G/E - Gas Heating/Electric Cooling; HP - Heat Pump
   CP - Central Plant Hot or Chilled Water
   LS - Light Switch
   UV - Unit Ventilator
   MUA- Make-up Air
   HW- Hot Water
   DHW- Domestic Hot Water
   MZ - Multizone
   AH - Air handler
   WH- Domestic Water Heater
   Fur - Furnance

LAN ARCHITECTURE DETAIL 1 — A / M-5

EMS DETAIL REFERENCE LIST — B / M-5

APPROVALS:
APPLICATION # ??????????

REGISTERED PROFESSIONAL ENGINEER — MICHAEL D. CONNER — M23585 — RENEWAL 9-30-2021 — MECHANICAL — STATE OF CALIFORNIA

DATE: 11-25-2020

EMS REPLACEMENT
BURROUGHS ELEMENTARY SCHOOL
166 N SIERRA VISTA AVE, FRESNO, CA 93702

FRESNO UNIFIED SCHOOL DISTRICT
4600 N. BRAWLEY AVE, FRESNO, CA.

REVISIONS

LAWRENCE ENGINEERING GROUP
7084 N. Maple Ave., Suite 101
Fresno, CA 93720
(559) 431-0101
FAX (559) 431-3562

TITLE:
ENERGY
MANAGEMENT
DETAILS

SHEET: M5

PROJECT 20140

17 March 2021 8:04 AM P:\2020\20140 FUSD Burroughs EMS Replacement\4-Drawings\4 M\M5 – CONTROLS.dwg ezequiel

NOTE: ALL □IRES INSIDE OF PANEL TO BE LABELED AS SHO□N □ITH HEAT SHRIN□ MAR□ERS ON TERMINATING ENDS OF □IRE.

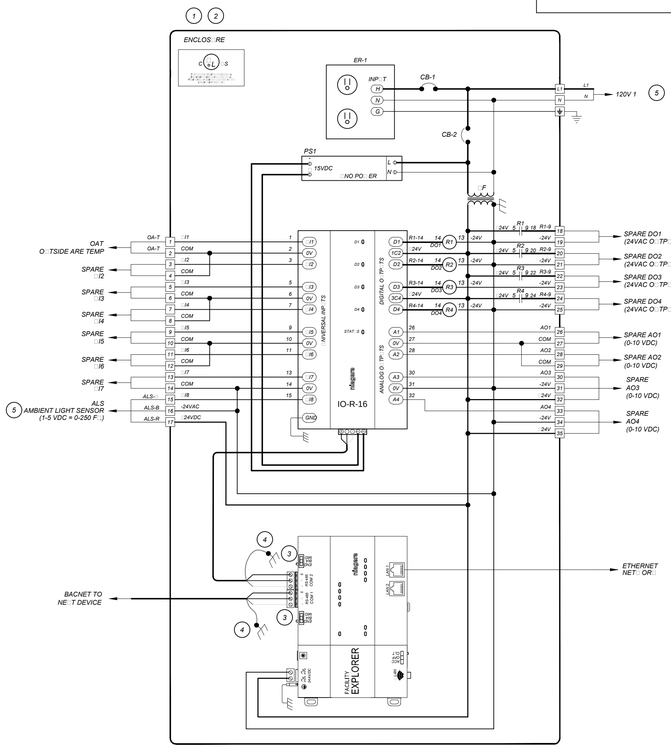

Panel Components	
TAG	DESCRIPTION
F□	F□-80 CONTROLLER AND SD CARD
	F□-80 SMA
	F□-80 DEVICE LICENCE
RIO16	16 POINT REMOTE INP□T/O□TP□T E□PANSION
□F	120 - 24V TRANSFORMER
CB-1	MAN□AL RESET 15.0 AMP CIRC□IT BREA□ER
CB-2	MAN□AL RESET 2.0 AMP CIRC□IT BREA□ER
ENC	NEMA-12
ENC	PANEL BAC□PLATE
ENC	PADLOC□□IT
ER-1	ELECTRICAL O□TLET
R1-R4	2-POLE 24VAC RELAY □/LED
R1-R4	2-POLE RELAY BASE
PS-1	15VDC PO□ER S□PPLY

Detail Notes	
1	CONTROL PANEL FABRICATED BY TOTAL CONTROL CONTACT DEVEN P□TNAM AT 559-291-1000
2	PANEL SHALL BE □L LISTED
3	JACE SELECTOR S□ITCH NEED TO BE SET TO THE "END" POSITION
4	RS-485 COMM B□S SHIELD TO BE GRO□NDED AT THE SCP PANEL ONLY
5	SEE DETAIL B/M-6

SUPERVISORY SCP SCHEMATIC DETAIL — A / M-6

Control Components	
TAG	DESCRIPTION
CDAT/HDAT	D□CT TEMP SENSOR
OAT	O□TSIDE AIR SENSOR
MAT	AVERAGING D□CT TEMP SENSOR
OAD	SPRING RET□RN DAMPER ACT□ATOR
RAD	SPRING RET□RN DAMPER ACT□ATOR
EAD	SPRING RET□RN DAMPER ACT□ATOR
PFDP	PRESS□RE TRANSD□CER
SFVFD	(N) VARIABLE FRE□□ENCY DRIVE

Detail Notes	
1	LINE VOLTAGE □ COND□IT BY DIVISION 16.
2	CONTROL COMPONENTS PROVIDED BY TOTAL CONTROL CONTACT DEVEN P□TNAM AT 559-291-1000.
3	REFER TO DETAIL D/M-6 FOR ZONE CONTROL DETAIL.
4	SEE DETAIL A/M-7 FOR TCP DIAGRAM.
5	F□SD TO PROGRAM MZ□
6	(N) VARIBLE FRE□□ENCY DRIVE AND MOTOR
7	PROVIDE (N) ACT□ATOR□FIELD VERIFY □□ANITY.

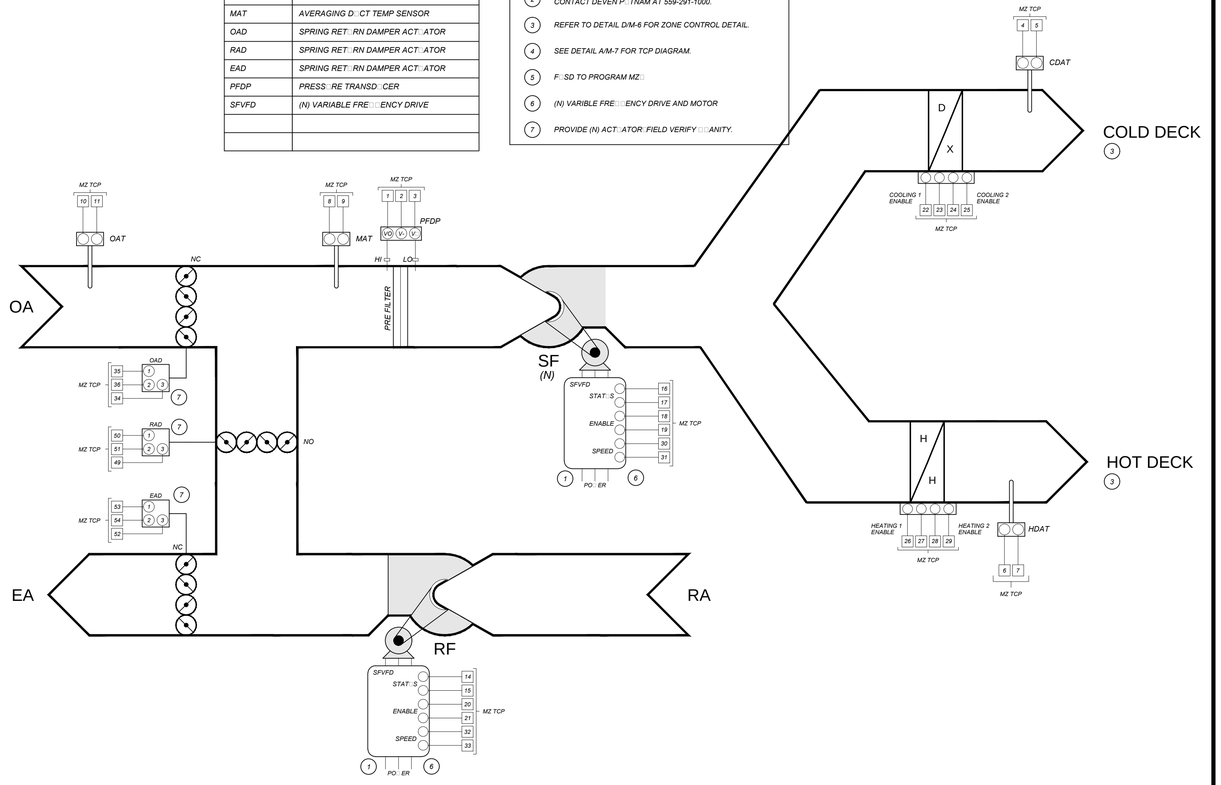

MULTI-ZONE CONTROL DETAIL — C / M-6

Control Components	
TAG	DESCRIPTION
OAT	10□ TYPE 3 O□TDOOR SENSOR
ALS	AMBIENT LIGHT SENSOR

Detail Notes	
1	LINE VOLTAGE □ COND□IT BY DIVISION 16
2	LOCATE AMBIENT LIGHT SENSOR AT NORTHERN E□POS□RE OF B□ILDING.
3	SEE DETAIL A/M-6

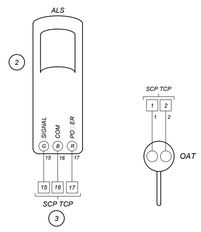

OUTDOOR PHOTOCELL AND TEMP SENSOR DETAIL — B / M-6

Control Components	
TAG	DESCRIPTION
NZS	ZONE SENSOR □ / SETPOINT ADJ□STMENT
DAT	DISCHARGED AIR TEMP SENSORS
ZNDA	ZONE DAMPER ACT□ATOR

Detail Notes	
1	LINE VOLTAGE □ COND□IT BY DIVISION 16.
2	CONTROL COMPONENTS PROVIDED BY TOTAL CONTROL CONTACT DEVEN P□TNAM AT 559-291-1000.

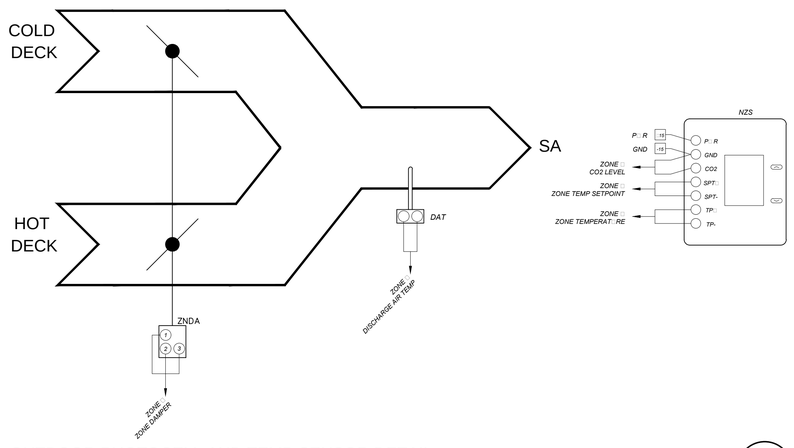

OUTDOOR PHOTOCELL AND TEMP SENSOR DETAIL — D / M-6

APPROVALS:
APPLICATION # ??????????

REGISTERED PROFESSIONAL ENGINEER — MICHAEL D. CONROY — M23585 — REN. 9-30-2021 — MECHANICAL — STATE OF CALIFORNIA

DATE: 11-25-2020

EMS REPLACEMENT
BURROUGHS ELEMENTARY SCHOOL
166 N SIERRA VISTA AVE. FRESNO, CA 93702

FRESNO UNIFIED SCHOOL DISTRICT
4600 N. BRAWLEY AVE. FRESNO, CA.

REVISIONS

LAWRENCE ENGINEERING GROUP
7084 N. Maple Ave., Suite 101
Fresno, CA 93720
(559) 431-0101
FAX (559) 431-3562

TITLE: ENERGY MANAGEMENT DETAILS

SHEET: M6

PROJECT 20140

17 March 2021 8:04 AM P:\2020\20140 FUSD Burroughs EMS Replacement\4-Drawings\4 M\M6 - CONTROLS.dwg ezequiel

NOTE: ALL WIRES INSIDE OF PANEL TO BE LABELED AS SHOWN WITH HEAT SHRINK MARKERS ON TERMINATING ENDS OF WIRE.

Detail Notes

1. CONTROL PANELS FABRICATED BY TOTAL CONTROL CONTACT DEVEN P. TNAM AT 559-291-1000
2. PANEL SHALL BE UL LISTED
3. LINE VOLTAGE AND CONDUIT BY DIVISION 16.

Panel Components

TAG	DESCRIPTION
PCG	GENERAL PROGRAMMABLE CONTROLLER
ENC	NEMA-4 ENCLOSURE
ENC	SOLID PANEL BACKPLATE
ENC	PANEL LOCKIT
CB-1	2.0 AMP CIRCUIT BREAKER
XF	96VA 24VAC TRANSFORMER
R1-R6	2-POLE 24VAC RELAY W/ LED
R1-R6	2-POLE RELAY BASE
PC	I/O EXPANSION MODULE
PS-1	15VDC POWER SUPPLY

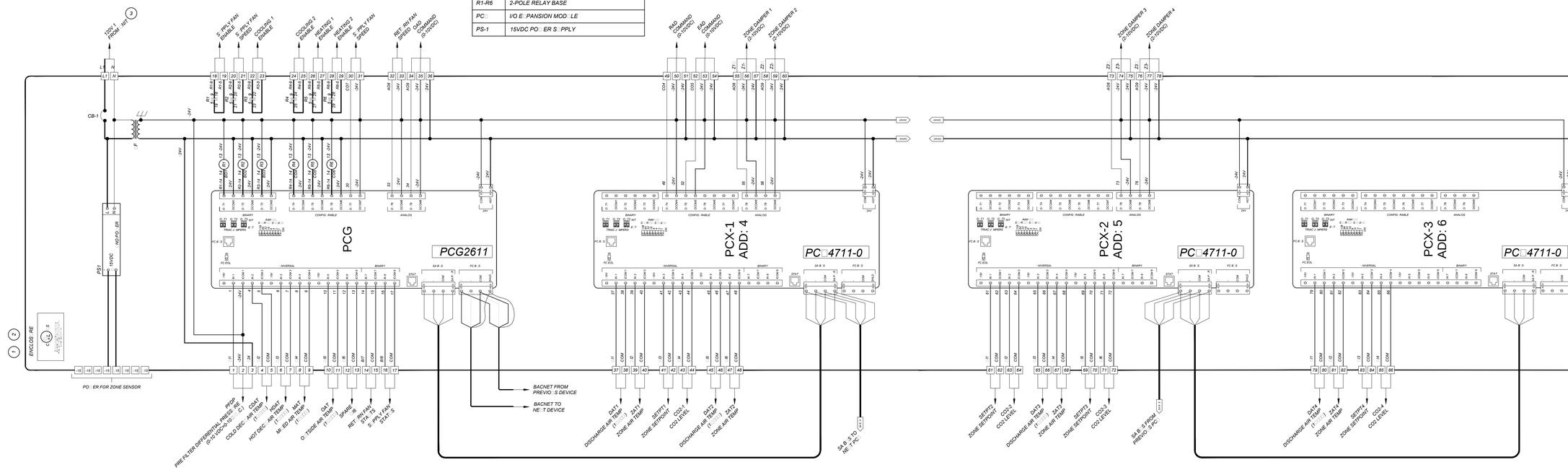

MULTI-ZONE SCHEMATIC DETAIL

A / M-7

Package Unit

A thermostat shall be mounted in the space.

Occupied Cool Setpoint: 75°F (adjustable)

Occupied Heat Setpoint: 68°F (adjustable)

Warm/Cool Adjustment: +3°/-3°

Unoccupied Mode: The unit shall remain OFF in unoccupied mode.

Occupied Mode: The unit shall receive an occupied command from the Johnson FX Supervisory controller. The supply fan will be enabled. A current sensor on the supply fan shall prove supply fan run status. When the run status is proven ON, the following modes shall be allowed to happen.

Cooling Mode: When outside air is above the OA cooling lockout setpoint (65° F adjustable) and there is a call for cooling, the compressor shall stage on in order to satisfy the condition. Compressor shall be monitored with a current sensor to prove that the compressor is running.

Heating Mode: When outside air is below the OA heating lockout setpoint (60° F adjustable) and there is a call for heating the reversing valve shall stage on in order to satisfy the condition.

Demand Control Ventilation: CO2 readings shall come from the wall mount Temp/CO2 sensor. If the zone CO2 PPM reaches 800 ppm (adj.), the economizer shall modulate open to the maximum outdoor air position to satisfy the demand. Once the CO2 level drops below 800 ppm (adj.) , the economizer shall close to the minimum outdoor air position.

CO2 Monitoring: If CO2 in the space rises above CO2 alarm setpoint (adj.), the system will generate a Niagara alarm.

Detail Notes

1. LINE VOLTAGE CONDUIT BY DIVISION 16.
2. OAT GLOBALLY SHARED SOFTWARE POINT
3. CONTROL COMPONENTS PROVIDED BY TOTAL CONTROL CONTACT DEVEN P. TNAM AT 559-291-1000.
4. SEE DETAIL C/M-7 FOR TCP DIAGRAM.
5. FIELD VERIFY NUMBER OF COOLING / HEATING STAGES.

Control Components

TAG	DESCRIPTION
DAT	DUCT TEMP SENSOR
CCS:SFCS	CURRENT SENSOR
NZS	NETWORK ZONE SENSOR / CO_2
OAD/RAD	SPRING RETURN DAMPER ACTUATOR

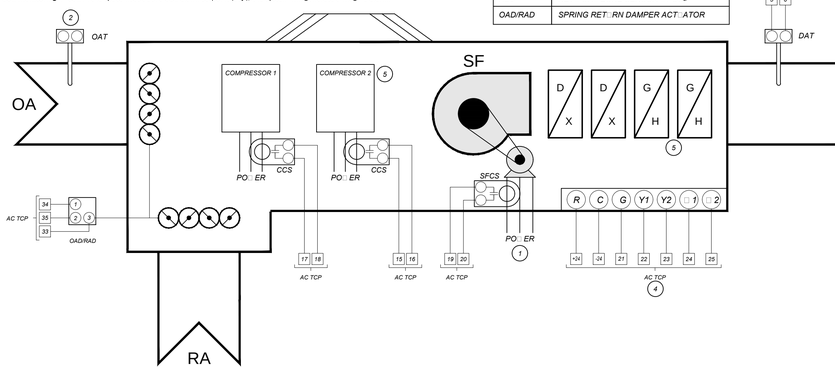

H/C UNIT CONTROL DETAIL

B / M-7

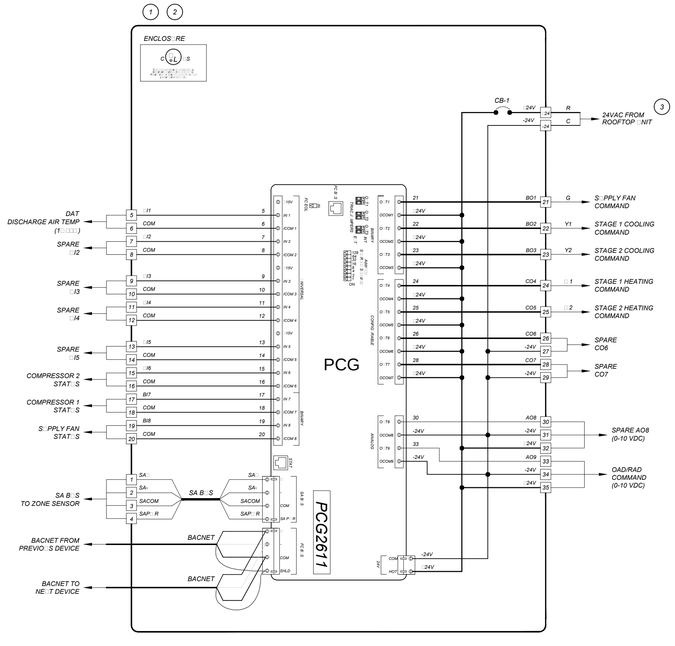

ROOF TOP UNIT TCP SCHEMATIC DETAIL 1

C / M-7

NOTE: ALL WIRES INSIDE OF PANEL TO BE LABELED AS SHOWN WITH HEAT SHRINK MARKERS ON TERMINATING ENDS OF WIRE.

Panel Components

TAG	DESCRIPTION
PCG	GENERNAL PROGRAMMABLE CONTROLLER
ENC	NEMA 4 ENCLOSURE
ENC	BACKPLATE ENCLOSURE
ENC	PANEL LOCK KIT
CB-1	2.0 AMP CIRCUIT BREAKER

Details Notes

1. CONTROL PANEL FABRICATED BY TOTAL CONTROL CONTACT DEVEN P. TNAM 559-291-1000
2. PANEL SHALL BE UL LISTED
3. LINE VOLTAGE / CONDUIT BY DIVISION 16.

APPROVALS:

APPLICATION # ??????????

REGISTERED PROFESSIONAL ENGINEER — MICHAEL D. CONROY — M23585 — REN. 9-30-2021 — MECHANICAL — STATE OF CALIFORNIA

DATE: 11-25-2020

EMS REPLACEMENT
BURROUGHS ELEMENTARY SCHOOL
166 N SIERRA VISTA AVE. FRESNO, CA 93702

FRESNO UNIFIED SCHOOL DISTRICT
4600 N. BRAWLEY AVE. FRESNO, CA.

REVISIONS

LAWRENCE ENGINEERING GROUP
Fresno, CA 93720
FAX (559) 431-1982
7084 N. Maple Ave., Suite 101
(559) 431-0101

TITLE: ENERGY MANAGEMENT DETAILS

SHEET: M7

PROJECT 20140

17 March 2021 8:05 AM P:\2020\20140 FUSD Burroughs EMS Replacement\4 - Drawings\4 M\M7 – CONTROLS.dwg ezequiel

Control Components	
TAG	DESCRIPTION
DAT	D□CT TEMP SENSOR
SFCS/C□CS	C□RRENT SENSOR
RIB	24VAC RELAY IN A BO□
NZS	NET□ OR□ ZONE SESNOR □ / CO_2

Detail Notes	
1	LINE VOLTAGE □ COND□IT BY DIVISION 16.
2	□NIT SHALL SH□T DO□N □PON DETECTION OF SMO□E. □IRE ACCORDINGLY.
3	CONTROL COMPONENTS PROVIDED BY TOTAL CONTROL CONTACT DEVEN P□TNAM AT 559-291-1000.
4	SEE DETAIL B/M-8 FOR TCP DIAGRAM.

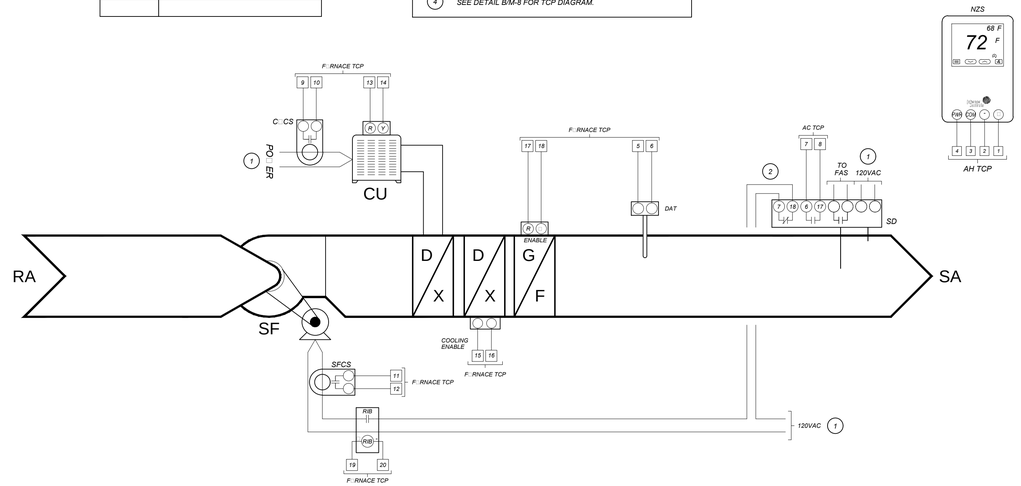

FURNACE C1/F-1 CONTROL DETAIL

A M-8

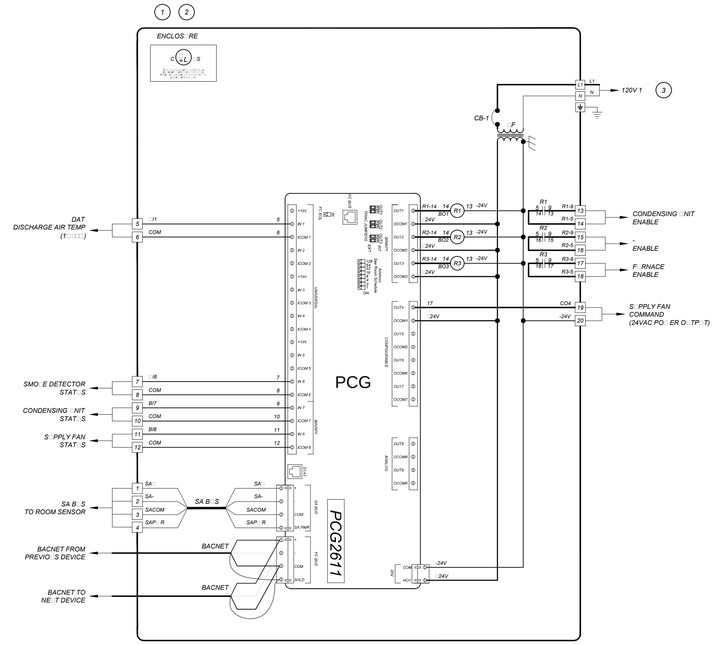

FURNACE TCP SCHEMATIC DETAIL

B M-8

Panel Components	
TAG	DESCRIPTION
PCG	GENERAL PROGRAMMABLE CONTROLLER
ENC	NEMA 4 ENCLOSURE
ENC	BACKPLATE ENCLOSURE
ENC	PANEL LOCK KIT
CB-1	2.0 AMP CIRC□IT BREA□ER
□F	96VA 24VAC TRANSFORMER
R1-R3	2-POLE 24VAC RELAY □ / LED
R1-R3	2-POLE RELAY BASE

Detail Notes	
1	CONTROL PANELS FABRICATED BY TOTAL CONTROL CONTACT DEVEN P□TNAM AT 559-291-1000
2	PANEL SHALL BE □L LISTED
3	LINE VOLTAGE AND COND□IT BY DIVISION 16.

NOTE: ALL □IRES INSIDE OF PANEL TO BE LABELED AS SHO□N □ITH HEAT SHRIN□ MAR□ERS ON TERMINATING ENDS OF □IRE.

Control Components	
TAG	DESCRIPTION
DAT	D□CT TEMP SENSOR
SFCS/C□CS	C□RRENT SENSOR
NZS	NET□ OR□ ZONE SENSOR □ ITH CO2
OAD	DAMPER ACT□ATOR

Sheet Notes	
1	LINE VOLTAGE □ COND□IT BY DIVISION 16.
2	CONTROL COMPONENTS PROVIDED BY TOTAL CONTROL CONTACT DEVEN P□TNAM AT 559-291-1000
3	SEE DETAIL D/M-8 FOR TCP DIAGRAM.

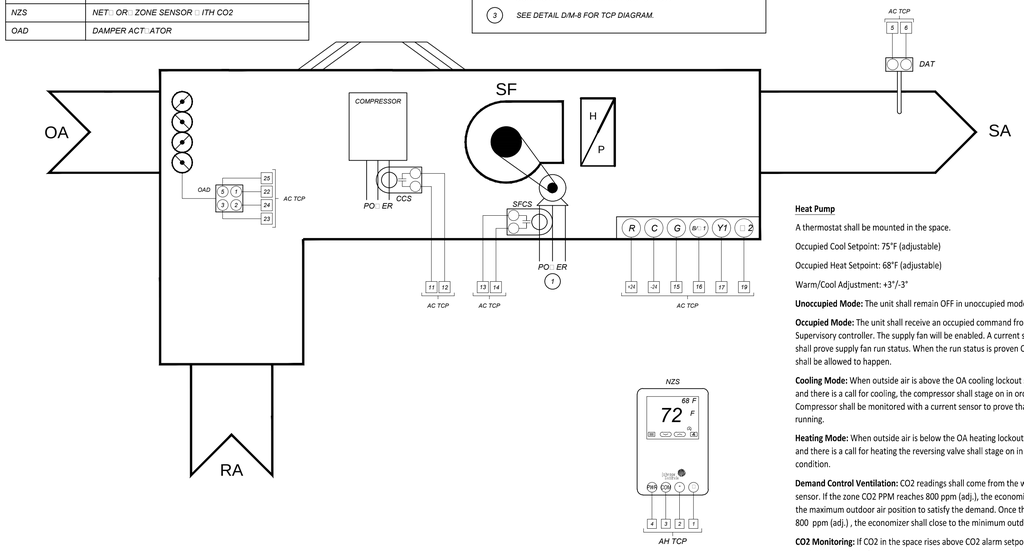

Heat Pump

A thermostat shall be mounted in the space.

Occupied Cool Setpoint: 75°F (adjustable)

Occupied Heat Setpoint: 68°F (adjustable)

Warm/Cool Adjustment: +3°/-3°

Unoccupied Mode: The unit shall remain OFF in unoccupied mode.

Occupied Mode: The unit shall receive an occupied command from the Johnson FX Supervisory controller. The supply fan will be enabled. A current sensor on the supply fan shall prove supply fan run status. When the run status is proven ON, the following modes shall be allowed to happen.

Cooling Mode: When outside air is above the OA cooling lockout setpoint (65° F adjustable) and there is a call for cooling, the compressor shall stage on in order to satisfy the condition. Compressor shall be monitored with a current sensor to prove that the compressor is running.

Heating Mode: When outside air is below the OA heating lockout setpoint (60° F adjustable) and there is a call for heating the reversing valve shall stage on in order to satisfy the condition.

Demand Control Ventilation: CO2 readings shall come from the wall mount Temp/CO2 sensor. If the zone CO2 PPM reaches 800 ppm (adj.), the economizer shall modulate open to the maximum outdoor air position to satisfy the demand. Once the CO2 level drops below 800 ppm (adj.) , the economizer shall close to the minimum outdoor air position.

CO2 Monitoring: If CO2 in the space rises above CO2 alarm setpoint (adj.), the system will generate a Niagara alarm.

WALL MOUNTED HEAT PUMP CONTROL DETAIL

C M-8

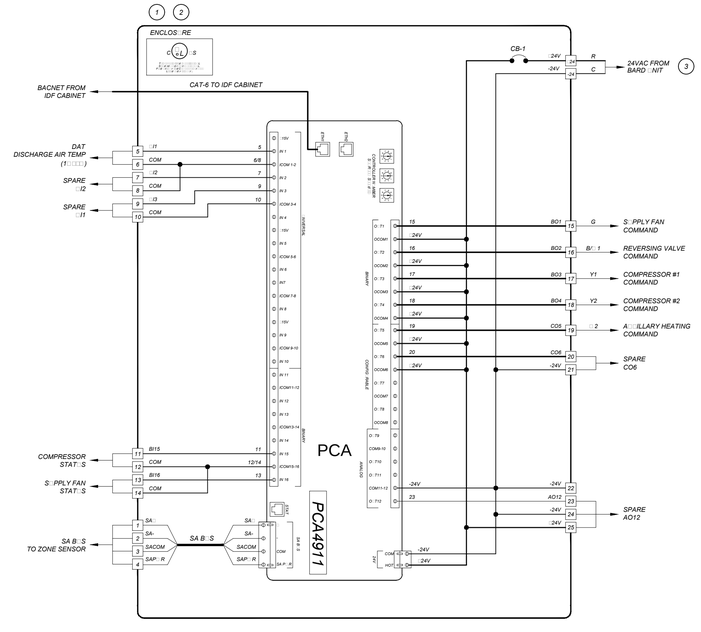

WALL MOUNTED HEAT PUMP TCP SCHEMATIC DETAIL

D M-8

Panel Components	
TAG	DESCRIPTION
PCA	ADVANCED PROGRAMMABLE CONTROLLER
CB-1	MAN□AL RESET 2.0 AMP CIRC□IT BREA□ER
ENC	NEMA 4 ENCLOS□RE
ENC	BAC□PLATE ENCLOS□RE
ENC	PANEL LOC□□□IT
TCP	TCP LABEL

Details Notes	
1	CONTROL PANEL FABRICATED BY TOTAL CONTROL CONTACT DEVEN P□TNAM AT 559-291-1000.
2	PANEL SHALL BE □L LISTED
3	LINE VOLTAGE □ COND□IT BY DIVISION 16.

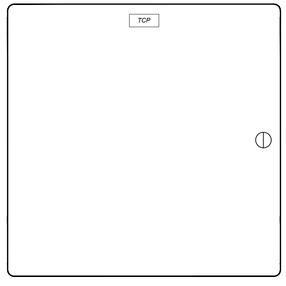

PANEL DOOR LAYOUT

APPROVALS:

APPLICATION # ??????????

REGISTERED PROFESSIONAL ENGINEER — MICHAEL D. CONSTANTINO — M23585 — REN. 9-30-2021 — MECHANICAL — STATE OF CALIFORNIA

DATE: 11-25-2020

EMS REPLACEMENT
BURROUGHS ELEMENTARY SCHOOL
166 N SIERRA VISTA AVE. FRESNO, CA 93702

FRESNO UNIFIED SCHOOL DISTRICT
4600 N. BRAWLEY AVE. FRESNO, CA.

REVISIONS

LAWRENCE ENGINEERING GROUP
7084 N. Maple Ave., Suite 101
Fresno, CA 93720
(559) 431-1082
FAX (559) 431-1082

TITLE:
ENERGY MANAGEMENT DETAILS

SHEET: M8

PROJECT 20140

17 March 2021 8:05 AM P:\2020\20140 FUSD Burroughs EMS Replacement\4-Drawings\4 M\M8 - CONTROLS.dwg ezequiel

Control Components		
TAG	□TY	DESCRIPTION
DAT	-	D□CT TEMP SENSOR
CCS:SFCS	-	C□RRENT SENSOR
NZS	-	NET□OR□ZONE SENSOR □ITH CO2
OAD/RAD	-	SPRING RET□RN DAMPER ACT□ATOR

Sheet Notes

1. LINE VOLTAGE □COND□IT BY DIVISION 16.
2. OAT GLOBALLY SHARED SOFT□ ARE POINT
3. CONTROL COMPONENTS PROVIDED BY TOTAL CONTROL CONTACT DEVEN P□TNAM AT 559-291-1000.
4. REFER TO DETAIL F/M9

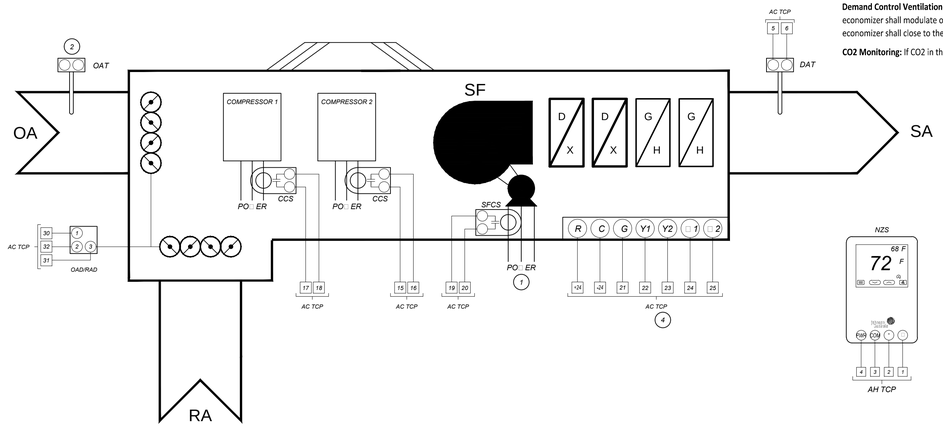

ROOF TOP UNIT CONTROL — E / M9

Package Unit

A thermostat shall be mounted in the space.

Occupied Cool Setpoint: 75°F (adjustable)

Occupied Heat Setpoint: 68°F (adjustable)

Warm/Cool Adjustment: +3°/-3°

Unoccupied Mode: The unit shall remain OFF in unoccupied mode.

Occupied Mode: The unit shall receive an occupied command from the Johnson FX Supervisory controller. The supply fan will be enabled. A current sensor on the supply fan shall prove supply fan run status. When the run status is proven ON, the following modes shall be allowed to happen.

Cooling Mode: When outside air is above the OA cooling lockout setpoint (65° F adjustable) and there is a call for cooling, the compressor shall stage on in order to satisfy the condition. Compressor shall be monitored with a current sensor to prove that the compressor is running.

Heating Mode: When outside air is below the OA heating lockout setpoint (60° F adjustable) and there is a call for heating the reversing valve shall stage on in order to satisfy the condition.

Demand Control Ventilation: CO2 readings shall come from the wall mount Temp/CO2 sensor. If the zone CO2 PPM reaches 800 ppm (adj.), the economizer shall modulate open to the maximum outdoor air position to satisfy the demand. Once the CO2 level drops below 800 ppm (adj.) , the economizer shall close to the minimum outdoor air position.

CO2 Monitoring: If CO2 in the space rises above CO2 alarm setpoint (adj.), the system will generate a Niagara alarm.

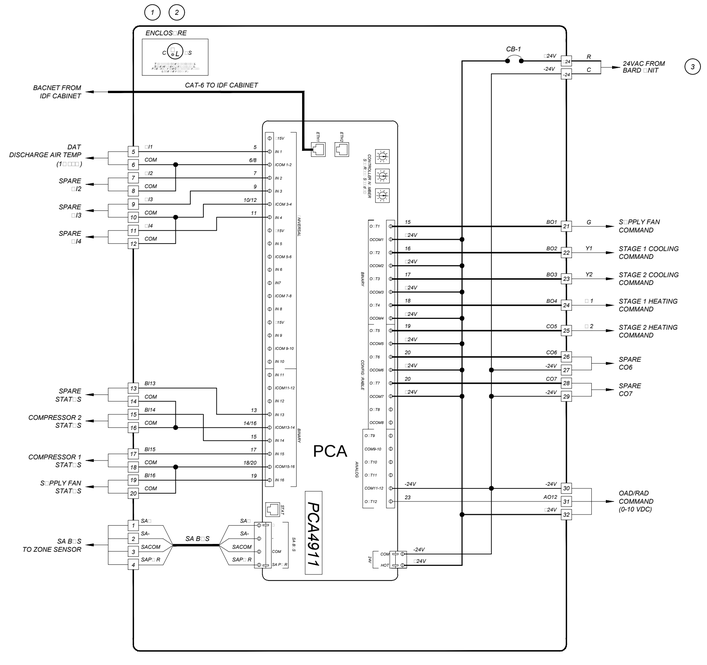

ROOF TOP UNIT TCP SCHEMATIC — F / M9

NOTE: ALL □IRES INSIDE OF PANEL TO BE LABELED AS SHO□N □ITH HEAT SHRINK□MAR□ERS ON TERMINATING ENDS OF □IRE.

Panel Components	
TAG	DESCRIPTION
PCA	ADVANCED PROGRAMMABLE CONTROLLER
CB-1	MANUAL RESET 2.0 AMP CIRCUIT BREAKER
ENC	NEMA 4 ENCLOSURE
ENC	BACKPLATE ENCLOSURE
ENC	PANEL LOCK KIT
TCP	TCP LABEL

Sheet Notes

1. CONTROL PANEL FABRICATED BY TOTAL CONTROL CONTACT DEVEN P□TNAM AT 559-291-1000.
2. PANEL SHALL BE □L LISTED
3. LINE VOLTAGE□COND□IT BY DIVISION 16.

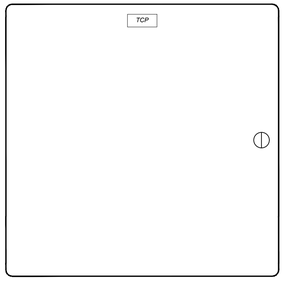

PANEL DOOR LAYOUT

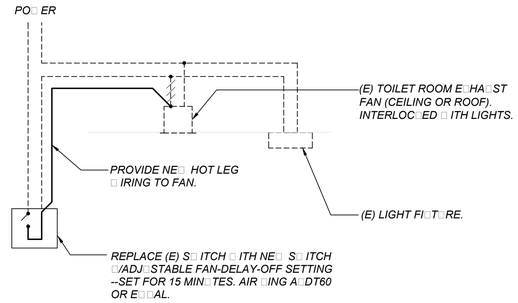

LIGHT / EXHAUST TIMER SWITCH — A / M9

SCALE: NONE

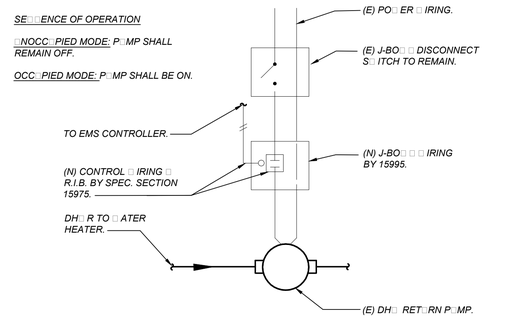

DOMESTIC H.W.R. PUMP CONTROL — B / M9

SCALE: NONE

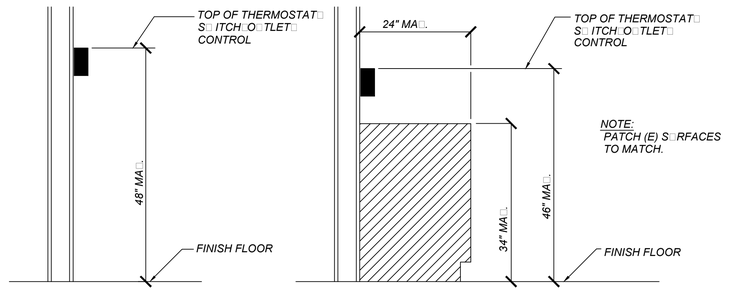

MO□NTING HEIGHT — OVER OBSTR□CTION

THERMOSTAT MO□NTING — C / M9

SCALE: NONE

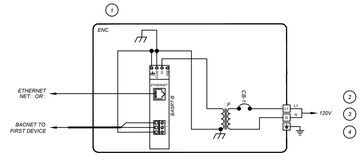

R□□□r P□□□□C□□ □□□□□□□	
TAG	DESCRIPTION
CB-1	2.0 AMP CIRC□IT BREA□ER
BASRT-B	BACNET/IP MS/TP RO□TER
□F	50A 24VAC TRANSFORMER
ENC	12□□12 NEMA 1 ENCLOS□RE □ITH BAC□PLATE

D□□□□N□□□□

1. CONTROL PANEL FABRICATED BY TOTAL CONTROL CONTACT DEVEN P□TNAM AT 559-291-1000.
2. LINE VOLTAGE □COND□IT BY DIVISION 16.
3. FOR PORTABLE BLDG: PROVIDE AND INSTALL A DEDICATED 20A/1P CIRC□IT BREA□ER TO THE PORTABLE B□ILDING PANEL.
4. FOR PERMANENT BLDG: CONNECT RO□TER TO (E) CIRC□IT.

BACNET/IP MS/TP ROUTER PANEL DETAIL — D / M9

SCALE: NONE

APPROVALS:

APPLICATION # ??????????

REGISTERED PROFESSIONAL ENGINEER — MICHAEL D. CONNELLY — M23585 — REN. 9-30-2021 — MECHANICAL — STATE OF CALIFORNIA

DATE: 11-25-2020

EMS REPLACEMENT
BURROUGHS ELEMENTARY SCHOOL
166 N SIERRA VISTA AVE. FRESNO, CA 93702

FRESNO UNIFIED SCHOOL DISTRICT
4600 N. BRAWLEY AVE. FRESNO, CA.

REVISIONS

LAWRENCE ENGINEERING GROUP
7084 N. Maple Ave., Suite 101
Fresno, CA 93720
(559) 431-1001
FAX (559) 431-1082

TITLE: ENERGY MANAGEMENT DETAILS

SHEET: M9

PROJECT 20140

17 March 2021 8:05 AM P:\2020\20140 FUSD Burroughs EMS Replacement\4-Drawings\4 M\M9 - CONTROLS.dwg ezequiel

GENERAL ELECTRICAL NOTES:

1. ALL WORK SHALL MEET THE LATEST ADOPTED ADDITIONS OF THE CALIFORNIA CODE OF REGULATIONS, TITLE 24 AND ALL OTHER APPLICABLE REGULATIONS, WHICH INCLUDE:

CALIFORNIA BUILDING CODE	2019
CALIFORNIA ELECTRICAL CODE	2019
NON RESIDENTIAL CEC ENERGY STANDARDS	2019

   NOTHING IN THE PLANS OR SPECIFICATIONS IS TO BE CONSTRUED TO PERMIT WORK NOT CONFORMING TO THESE CODES.

2. IT IS THE INTENTION OF THESE PLANS AND SPECIFICATIONS TO COVER EVERYTHING REQUIRED TO PROVIDE FOR COMPLETE AND OPERATIVE SYSTEMS. THE CONTRACTOR IS TO FURNISH LABOR, MATERIAL, TRANSPORTATION, EQUIPMENT, MISCELLANEOUS SERVICES, ETC. REQUIRED TO ACCOMPLISH THIS RESULT. ANYTHING WHICH MAY BE REASONABLY CONSTRUED AS A NECESSARY PART OF THE INSTALLATION IS TO BE INCLUDED, WHETHER OR NOT SPECIFICALLY SHOWN OR MENTIONED.

3. THE CONTRACTOR SHALL EXAMINE THE SITE AND EXISTING CONDITIONS AND MAKE ALLOWANCES IN THE BID FOR ANY CONDITIONS NOT SHOWN ON THE ELECTRICAL DOCUMENTS.

4. ELECTRICAL ROUTING IS DIAGRAMMATIC ONLY. ACTUAL ROUTING & PHYSICAL CONDITIONS MAY VARY. THE CONTRACTOR IS RESPONSIBLE FOR DETERMINING THE ACTUAL ROUTING, CONNECTIONS, & PROVISION OF ALL APPURTENANCES NECESSARY FOR A COMPLETE & OPERATING SYSTEM.

5. ELECTRICAL EQUIPMENT SHALL HAVE AN APPROVED TESTING LABORATORY LABEL ATTACHED (UL, CSA ETC.) PER CEC 110.2.

6. PROVIDE LABELING AND DIRECTORIES FOR ALL SWITCHBOARDS AND PANELBOARDS PER CEC 408.4.

7. ELECTRICAL EQUIPMENT SHALL HAVE A SHORT CIRCUIT CURRENT RATING CAPABLE OF WITHSTANDING THE AVAILABLE SHORT CIRCUIT CURRENT PER CEC 110.9.

8. PROVIDE MINIMUM 30" WIDE x 78" HIGH x 36" DEEP [42" DEEP] WORK CLEARANCES IN FRONT OF PANELS, SERVICE OR EQUIPMENT RATED AT 120/208V 3Ø 4W [277/480V 3Ø 4W] PER CEC 110.26.

9. WIRING FOR 120/208V AND 277/480V SYSTEMS SHALL BE MIN. #12 AWG THHN/THWN-2 COPPER.

10. ALL CONDUCTORS ROUTED ON ROOFS EXPOSED TO SUNLIGHT SHALL BE XHHW-2.

11. FEEDERS SIZE #4 AND LARGER SHALL BE MEGGER TESTED. TEST RESULTS SHALL BE SUBMITTED TO THE ENGINEER.

12. ALL CONDUITS SHALL HAVE MINIMUM 36" COVER. INSTALL GALVANIZED RIGID STEEL RISERS & ELBOWS WHERE RISERS OCCUR. WRAP GRS BELOW GRADE OR PROVIDE PVC COATED GRS. EXPOSED CONDUIT SHALL BE GRS TO 8'-0", THEN EMT ABOVE AS APPROPRIATE. UNDER NO CIRCUMSTANCE SHALL PVC CONDUIT BE INSTALLED ABOVE GRADE.

13. CONDUIT INSTALLED ABOVE GRADE SHALL BE MIN. 3/4" TRADE SIZE. CONDUIT BELOW GRADE SHALL BE MIN. 1" TRADE SIZE.

14. ALL FLEXIBLE CONDUITS SHALL BE NO LONGER THAN 36" AND SHALL ONLY BE USED AT THE MOTOR END. SEE DETAILS 1/E-3, 2/E-3, 3/E-3 AND 4/E-3.

ELECT. EQUIPMENT ANCHORAGE NOTES:

ALL ELECTRICAL COMPONENTS SHALL BE ANCHORED AND INSTALLED PER THE DETAILS ON THE DSA APPROVED CONSTRUCTION DOCUMENTS. WHERE NO DETAIL IS INDICATED, THE FOLLOWING COMPONENTS SHALL BE ANCHORED OR BRACED TO MEET THE FORCE AND DISPLACEMENT REQUIREMENTS PRESCRIBED IN THE 2019 CBC, SECTIONS 1617A.1.18 THROUGH 1617A.1.26 AND ASCE 7-16, CHAPTERS 13, 26 AND 30:

1. ALL PERMANENT EQUIPMENT AND COMPONENTS.
2. TEMPORARY, MOVABLE OR MOBILE EQUIPMENT THAT IS PERMANENTLY ATTACHED (E.G. HARD WIRED) TO THE BUILDING ELECTRICAL UTILITY SERVICE. "PERMANENTLY ATTACHED" SHALL INCLUDE ALL ELECTRICAL CONNECTIONS EXCEPT PLUGS FOR 120/220 VOLT RECEPTACLES HAVING A FLEXIBLE CABLE.
3. TEMPORARY, MOVABLE OR MOBILE EQUIPMENT WHICH IS HEAVIER THAN 400 POUNDS OR HAS A CENTER OF MASS LOCATED 4 FEET OR MORE ABOVE THE ADJACENT FLOOR OR ROOF LEVEL THAT DIRECTLY SUPPORT THE COMPONENT IS REQUIRED TO BE RESTRAINED IN A MANNER APPROVED BY DSA.

THE FOLLOWING ELECTRICAL COMPONENTS SHALL BE POSITIVELY ATTACHED TO THE STRUCTURE BUT NEED NOT DEMONSTRATE DESIGN COMPLIANCE WITH THE REFERENCES NOTED ABOVE. THESE COMPONENTS SHALL HAVE FLEXIBLE CONNECTIONS PROVIDED BETWEEN THE COMPONENT AND ASSOCIATED CONDUIT. FLEXIBLE CONNECTIONS MUST ALLOW MOVEMENT IN BOTH TRANSVERSE AND LONGITUDINAL DIRECTIONS:

A. COMPONENTS WEIGHING LESS THAN 400 POUNDS AND HAVE A CENTER OF MASS LOCATED 4 FEET OR LESS ABOVE THE ADJACENT FLOOR OR ROOF LEVEL THAT DIRECTLY SUPPORT THE COMPONENT.
B. COMPONENTS WEIGHING LESS THAN 20 POUNDS, OR IN THE CASE OF DISTRIBUTED SYSTEMS, LESS THAN 5 POUNDS PER FOOT, WHICH ARE SUSPENDED FROM A ROOF OR FLOOR OR HUNG FROM A WALL.

THE ANCHORAGE OF ALL ELECTRICAL COMPONENTS SHALL BE SUBJECT TO THE APPROVAL OF THE DESIGN PROFESSIONAL IN GENERAL RESPONSIBLE CHARGE OR STRUCTURAL ENGINEER DELEGATED RESPONSIBILITY AND ACCEPTANCE BY DSA. THE PROJECT INSPECTOR WILL VERIFY THAT ALL COMPONENTS AND EQUIPMENT HAVE BEEN ANCHORED IN ACCORDANCE WITH THE ABOVE REQUIREMENTS.

ELECT. DISTRIBUTION SYSTEM BRACING NOTES:

THE ELECTRICAL DISTRIBUTION SYSTEM SHALL BE BRACED TO COMPLY WITH THE FORCES AND DISPLACEMENTS PRESCRIBED IN ASCE 7-16, SECTION 13.3 AS DEFINED IN ASCE 7-16, SECTIONS 13.6.5, 13.6.6, 13.6.7, 13.6.8, AND 2019 CBC, SECTIONS 1617A.1.24, 1617A.1.25, AND 1617A.1.26.

THE METHOD OF SHOWING BRACING AND ATTACHMENTS TO THE STRUCTURE FOR THE IDENTIFIED DISTRIBUTION SYSTEM SYSTEM ARE AS NOTED BELOW. WHEN BRACING AND ATTACHMENTS ARE BASED ON A PREAPPROVED INSTALLATION GUIDE (E.G., OSHPD OPM FOR 2013 CBC OR LATER), COPIES OF THE BRACING SYSTEM INSTALLATION GUIDE OR MANUAL SHALL BE AVAILABLE ON THE JOBSITE PRIOR TO THE START OF AND DURING THE HANGING AND BRACING OF THE DISTRIBUTION SYSTEMS. THE STRUCTURAL ENGINEER OF RECORD SHALL VERIFY THE ADEQUACY OF THE STRUCTURE TO SUPPORT THE HANGER AND BRACE LOADS.

THE ELECTRICAL DISTRIBUTION SYSTEM IS DETAILED ON THE APPROVED DRAWINGS WITH SPECIFIC NOTES AND DETAILS. WHEN A DETAIL IS NOT PROVIDED ON THE PLANS, THE ELECTRICAL DISTRIBUTION SYSTEM SHALL COMPLY WITH OSHPD PRE-APPROVAL #OPM-0052-13 (B-LINE).

ELECTRICAL SYMBOLS:

	WEATHERPROOF, G.F.I. PROTECTED DUPLEX RECEPTACLE, WALL MOUNTED +15" TO BOTTOM OF BOX, UNLESS OTHERWISE NOTED
	WEATHERPROOF, G.F.I. PROTECTED DUPLEX RECEPTACLE, WALL MOUNTED +15" TO BOTTOM OF BOX, UNLESS OTHERWISE NOTED
	JUNCTION BOX
	MOTOR CONNECTION AND FUSIBLE DISCONNECT SWITCH, FUSE AS REQUIRED, NEMA 3R FOR OUTDOOR
	VARIABLE FREQUENCY DRIVE
	FVNR MOTOR STARTER
	POWER DISTRIBUTION BOARD OR WIRE GUTTER AS NOTED
T	TRANSFORMER
	WIRES IN CONDUIT, CONCEALED IN OR UNDER FLOOR
	WIRES IN CONDUIT, CONCEALED IN WALL OR CEILING
A-2	HOMERUN OF CONDUIT AND WIRING, CIRCUIT NO. 2 TO PANEL 'A'
	CROSS HATCHES INDICATE NUMBER OF #12 AWG. CONDUCTORS IN CONDUIT, WHEN MORE THAN TWO. WIRE SIZE INDICATED ON PLANS WHEN OTHER #12 AWG. PROVIDE GROUND PER CEC 250. (LARGE HATCHES ARE NEUTRAL CONDUCTORS, SMALL HATCHES ARE HOT OR SWITCH-LEG CONDUCTORS, CURVED HATCHES ARE 0-10V PURPLE & GREY CONDUCTORS)
SURFACE / FLUSH	PANELBOARD
(E)	EXISTING
(N)	NEW
(R)	REPLACE
(D)	DEMOLISH
W.P.	WEATHERPROOF
U.O.N.	UNLESS OTHERWISE NOTED

Hardin-Davidson Engineering
356 Pollasky Ave., Suite 200
Clovis, CA 93612
559.323.4995 tel - 559.323.4928 fax

REGISTERED PROFESSIONAL ENGINEER R. J. HARDIN No. 9125 ELECTRICAL STATE OF CALIFORNIA

APPROVALS:

APPLICATION # ??????????

REGISTERED PROFESSIONAL ENGINEER MICHAEL D. CANTEMI M23588 REN. 9-30-2021 MECHANICAL STATE OF CALIFORNIA

DATE: 11-25-2020

EMS REPLACEMENT
BURROUGHS ELEMENTARY SCHOOL
166 N SIERRA VISTA AVE. FRESNO, CA 93702

FRESNO UNIFIED SCHOOL DISTRICT
4600 N. BRAWLEY AVE. FRESNO, CA.

REVISIONS

LAWRENCE ENGINEERING GROUP
Fresno, CA 93720
FAX (559) 431-1302
7094 N. Maple Ave., Suite 101
(559) 431-1001

TITLE:
ELECTRICAL
SYMBOLS & NOTES

SHEET: 1 OF 2
E-1
PROJECT 20140

17 March 2021 11:00 AM Z:\Clients\Lawrence Engineering Group\21029 - Burroughs ES EMS\CAD Files\21029 - Electrical.dwg patrick moy

MOTOR REPLACEMENT SCHEDULE				
UNIT	MOTOR	OLD MOTOR SIZE (HP)	NEW MOTOR SIZE (HP)	WIRE REQUIRED
AC-1	SUPPLY	7.5	10	3#12
AC-1	EXHAUST	1	2	3#14
AC-2	SUPPLY	10	15	3#10
AC-2	EXHAUST	2	3	3#14
AC-3	SUPPLY	7.5	10	3#12
AC-3	EXHAUST	1	2	3#14
AC-4	SUPPLY	10	15	3#10
AC-4	EXHAUST	1	2	3#14

UNIT MCA REQUIREMENTS				
UNIT	EXIST. MCA	NEW MCA	MOCP	FEEDER WIRE REQUIRED
AC-1	66.2	72.7	80	1-1/4"C. - 3#3, 1#8 GRD.
AC-2	70.5	81.1	90	1-1/4"C. - 3#3, 1#8 GRD.
AC-3	66.2	72.7	80	1-1/4"C. - 3#3, 1#8 GRD.
AC-4	68.8	79.7	80	1-1/4"C. - 3#3, 1#8 GRD.

DRAWING KEY NOTES: (2)

1. DISCONNECT EXISTING FAN MOTORS AND STARTERS IN AC UNIT. REMOVE EXISTING FVNR MOTOR STARTER. INSTALL AND CONNECT NEW VFDS AS REQUIRED WITH ALL NEW WIRING AND PROVIDE FUSING AS REQUIRED BY VFD MANUFACTURER. CONNECT NEW MOTOR PER MOTOR REPLACEMENT SCHEDULE, THIS SHEET. PROVIDE NEW 100A, 480V, 3 POLE, NEMA 3R RATED FUSED DISCONNECT SWITCH WITH FUSES (DUAL ELEMENT, TIME DELAY. CONTRACTOR SHALL ALLOW FOR UP TO 100A FUSES.). REPLACE ANY EXISTING LIQUID-TITE FLEXIBLE CONDUIT WITH NEW (MAXIMUM LENGTH OF 36" PER DISTRICT STANDARD). PROVIDE NEW UPGRADED FEEDER WIRING PER UNIT MCA REQUIREMENT CHART, THIS SHEET. CONTRACTOR IS TO VISIT THE JOBSITE AND OBSERVE THE EXISTING CONDITIONS. IF THE EXISTING FEEDER RUNS ACROSS THE ROOF, THE CONTRACTOR SHALL DERATE THE FEEDER AS REQUIRED BY C.E.C. FOR ROOFTOP INSTALLATIONS.
2. DISCONNECT AND RECONNECT EXISTING EXHAUST FAN AS REQUIRED FOR INSTALLATION OF NEW MOTORS AND/OR CONTROLS. COORDINATE WITH MECHANICAL AND CONTROLS CONTRACTORS AS REQUIRED.

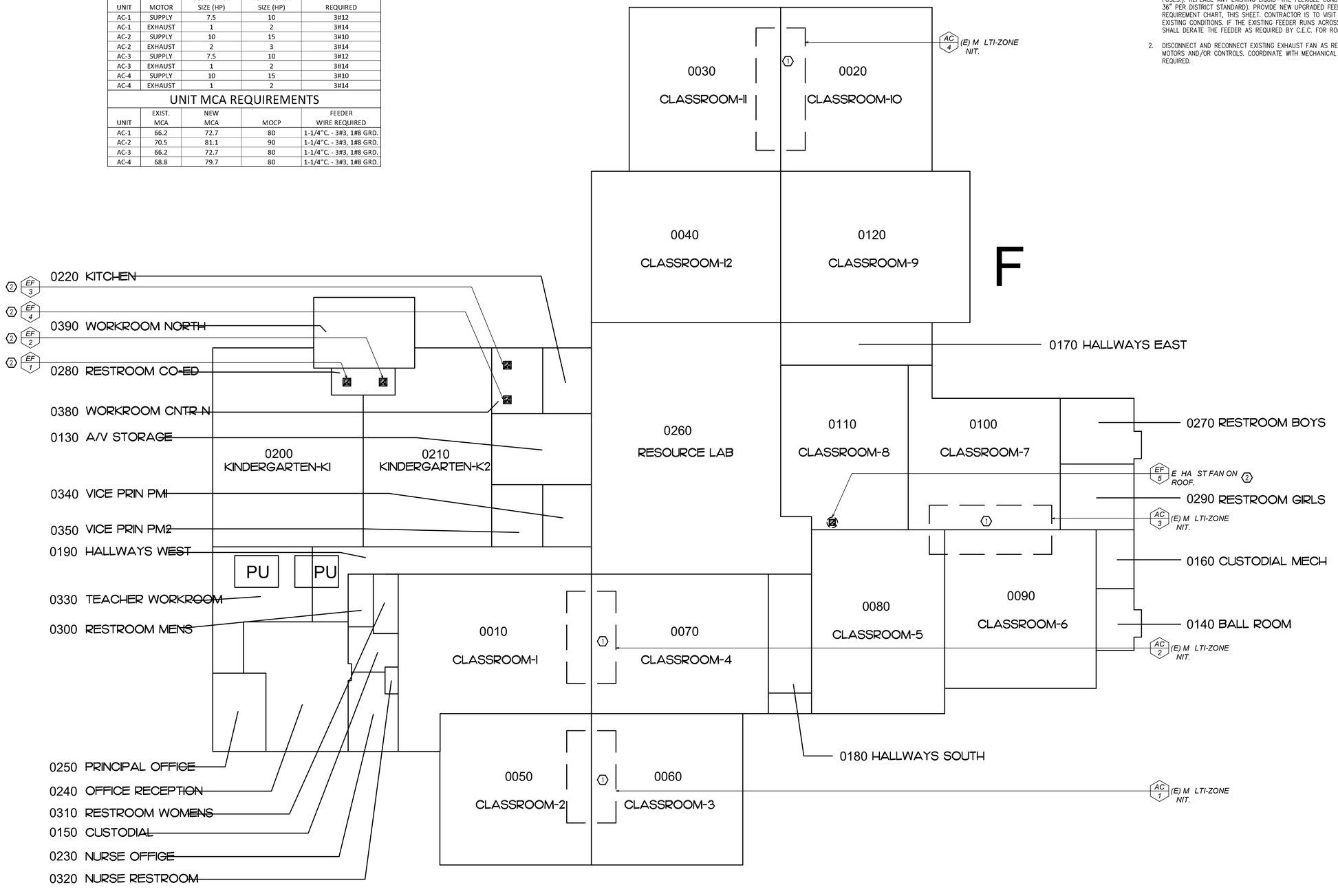

BLDG. F CLASSROOM ELECTRICAL PLAN

SCALE: 1/16" = 1'-0"

Hardin-Davidson Engineering
356 Pollasky Ave., Suite 200
Clovis, CA 93612
559.323.4995 tel - 559.323.4928 fax

REGISTERED PROFESSIONAL ENGINEER R. J. HARDIN No. 9125 ELECTRICAL STATE OF CALIFORNIA

APPROVALS:
APPLICATION # ??????????

REGISTERED PROFESSIONAL ENGINEER MICHAEL D. CANTEMI M23588 REN. 9-30-2021 MECHANICAL STATE OF CALIFORNIA

DATE: 11-25-2020

EMS REPLACEMENT
BURROUGHS ELEMENTARY SCHOOL
166 N SIERRA VISTA AVE. FRESNO, CA 93702

FRESNO UNIFIED SCHOOL DISTRICT
4600 N. BRAWLEY AVE. FRESNO, CA.

REVISIONS

LAWRENCE ENGINEERING GROUP
7084 N. Maple Ave., Suite 101
Fresno, CA 93720
(559) 431-1010
FAX (559) 431-1302

TITLE:
BLDG. F CLASSROOM
ELECTRICAL
PLAN

SHEET: 2 OF 2
E-2
PROJECT 20140

17 March 2021 11:00 AM Z:\Clients\Lawrence Engineering Group\21029 - Burroughs ES EMS\CAD Files\21029 - Electrical.dwg patrick moy

FRESNO UNIFIED SCHOOL DISTRICT

EATON ELEMENTARY SCHOOL
EMS REPLACEMENT
1451 EAST SIERRA AVE.
FRESNO, CALIFORNIA

OWNER
FRESNO UNIFIED SCHOOL DISTRICT
4600 N. BRAWLEY AVE.
FRESNO, CA 93722
(559) 457-3064
CONTACT: DANNY ANDERSON

MECHANICAL ENGINEER
LAWRENCE ENGINEERING GROUP
7084 NORTH MAPLE AVE. SUITE 101
FRESNO, CA 93720
(559) 431-0101
CONTACT: MIKE CANTELMI

ELECTRICAL ENGINEER
HARDIN-DAVIDSON ENGINEERING, INC.
356 POLLASKY AVE. SUITE 200
CLOVIS, CA 93612
(559) 323-4995
CONTACT: RICH HARDIN

GENERAL NOTES:

1. ALL WORK SHALL CONFORM TO 2019 EDITION TITLE 24, CALIFORNIA CODE OF REGULATIONS (CCR).
2. CHANGE TO THE APPROVED DRAWINGS AND SPECIFICATIONS SHALL BE MADE BY ADDENDA OR CONSTRUCTION CHANGE DOCUMENT (CCD) APPROVED BY DSA, AS REQUIRED BY SECTION 4-338, PART 1, TITLE 24, CCR.
3. A "DSA CERTIFIED" PROJECT INSPECTOR EMPLOYED BY THE DISTRICT (OWNER) AND APPROVED BY DSA SHALL PROVIDE CONTINUOUS INSPECTION OF THE WORK. THE DUTIES OF THE INSPECTOR ARE DEFINED IN SECTION 4-342, PART 1, TITLE 24, CCR. PROJECT REQUIRES A CLASS 3 INSPECTOR.
4. A DSA ACCEPTED TESTING LABORATORY DIRECTLY EMPLOYED BY THE DISTRICT (OWNER) SHALL CONDUCT ALL THE REQUIRED TESTS AND INSPECTIONS FOR THE PROJECT.
5. THE INTENT OF THESE DRAWINGS AND SPECIFICATIONS IS THAT THE WORK OF THE ALTERATION, REHABILITATION OR RECONSTRUCTION IS TO BE IN ACCORDANCE WITH TITLE 24, CCR. SHOULD ANY EXISTING CONDITIONS SUCH AS DETERIORATION OR NON-COMPLYING CONSTRUCTION BE DISCOVERED WHICH IS NOT COVERED BY THE CONTRACT DOCUMENTS WHEREIN THE FINISHED WORK WILL NOT COMPLY WITH TITLE 24, CCR, A CONSTRUCTION CHANGE DOCUMENT (CCD), OR A SEPARATE SET OF PLANS AND SPECIFICATIONS, DETAILING AND SPECIFING THE REQUIRED WORK SHALL SUBMITTED TO AND APPROVED BY DSA BEFORE PROCEEDING WITH THE WORK. (SECTION 4-317(C), PART 1, TITLE 24, CCR)

PROJECT NOTES:

1. PROVIDE ALL NEW CONTROL WIRE.
2. PROVIDE ALL NEW ACTUATORS & SENSORS. RETURN EXISTING ACTUATORS TO DISTRICT.
3. PROVIDE A NEW OUTSIDE AIR TEMPERATURE SENSOR AT EACH MULTI-ZONE.
4. PROVIDE NEW CONTROLS FOR ALL EXHAUST FANS.
5. PROVIDE NEW CONTROLS FOR EXTERIOR LIGHTING. REFER TO FLOOR PLAN SHEETS. MOUNT HARDWARE IN NEW LOCKABLE ENCLOSURES.
6. PROGRAMMING SHALL BE IN THE CONTROLLERS AT THE UNIT, NOT THE FRONT END. THE FRONT END IS A MONITORING STATUS, ON-OFF DEVICE ONLY.
7. WIRING IN ATTICS SHALL BE SUPPORTED ON J-HOOKS. NO WIRING ON ROOF.
8. SALVAGE ALL CONTROL EQUIPMENT AND RETURN TO OWNER.
9. PROVIDE AND INSTALL A 20A/1P, DUPLEX RECEPTACLE WITH CIRCUIT AND CIRCUIT BREAKER FROM THE NEAREST 120 VOLT PANEL IS 80-FEET AWAY FIELD LOCATE. PROVIDE POWER CONNECTIONS TO EACH ENERGY MANAGEMENT RIB. REFER TO MECHANICAL/EMS PLANS FOR EQUIPMENT LOCATIONS.

APPLICABLE CODES

2019 California Administrative Code - CCR Title 24, Part 1
2019 California Building Code - CCR Title 24, Part 2
2019 California Electrical Code - CCR Title 24, Part 3
2019 California Mechanical Code - CCR Title 24, Part 4
2019 California Plumbing Code - CCR Title 24, Part 5
2019 California Energy Code - CCR Title 24, Part 6
2019 California Fire Code - CCR Title 24, Part 9
2019 Existing Building Code - CCR Title 24, Part 10
2019 California Green Code - CCR Title 24 Part 11
2019 California Reference Code - CCR Title 24 Part 12
Title 19 CCR Public Saftey, State Fire Marshall Regulations
2019 NFPA 72 for Fire Alarm System.
CFC CH 33 Fire Saftey During Construction and Demolition

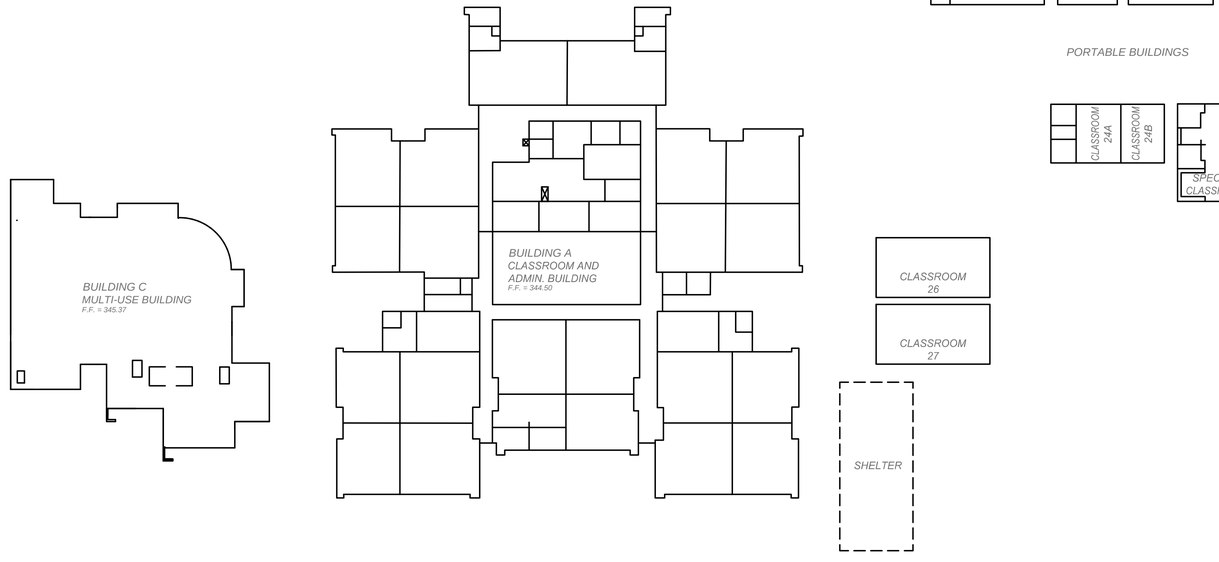

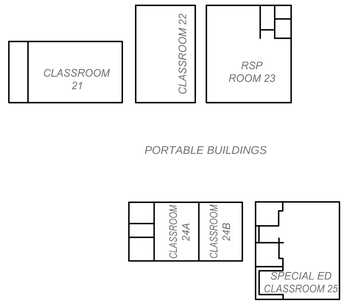

BLDG SITE PLAN

SCALE: 1" = 30'-0"

SHEET INDEX

MECHANICAL		SHEET COUNT
G1	COVER SHEET	1
M1	BUILDING A - EMS PLAN	2
M2	BUILDING C - EMS PLAN	3
M3	PORTABLE BUILDING - EMS PLAN	4
M4	ENERGY MANAGEMENT DETAILS	5
M5	ENERGY MANAGEMENT DETAILS	6
M6	ENERGY MANAGEMENT DETAILS	7
M7	ENERGY MANAGEMENT DETAILS	8
M8	ENERGY MANAGEMENT DETAILS	9
M9	ENERGY MANAGEMENT DETAILS	10
M10	ENERGY MANAGEMENT DETAILS	11
ELECTRICAL		
E1	ELECTRICAL SYMBOLS AND NOTES	12
E2	ELECTRICAL PLAN	13
SHEET COUNT TOTAL:		13

SCOPE OF WORK

THE SCOPE OF WORK IS AS INDICATED BY THE CONTRACT DRAWINGS AND SPECIFICATION AND IS SUMMARIZED AS FOLLOWS:

- REPLACE EXISTING DDC CONTROLS w/(N) JOHNSON CONTROLS FX-80
- REPLACE AND UP SIZE EXISTING MULTI-ZONE UNIT SUPPLY AND RETURN / EXHAUST FAN WITH NEW MOTOR & VFD. SEE PLANS FOR SIZE & ELECTRICAL DRAWINGS.
- PROVIDE AN EXISTING CONDITION DUCT TRAVERSE FOR EACH SUPPLY ZONE, OUTSIDE AIR, & RETURN AIR ON MULTI-ZONE UNIT MZU-1, MZU-2, MZU-3 AND MZU-4 PRIOR TO START OF WORK AND ALSO UPON PROJECT COMPLETION.

APPROVALS:
APPLICATION # ??????????

REGISTERED PROFESSIONAL ENGINEER
MICHAEL D. CANTELMI
M28568
RENEWAL 9-30-2021
MECHANICAL
STATE OF CALIFORNIA

DATE: 11-25-2020

EMS REPLACEMENT
EATON ELEMENTARY SCHOOL
1451 EAST SIERRA AVE. FRESNO, CA

FRESNO UNIFIED SCHOOL DISTRICT
4600 N. BRAWLEY AVE. FRESNO, CA.

REVISIONS

LAWRENCE ENGINEERING GROUP
Fresno, CA 93720
FAX (559) 431-1882
7084 N. Maple Ave., Suite 101
(559) 431-0101

TITLE: COVER

SHEET: G1

PROJECT 20138

17 March 2021 7:43 AM P:\2020\20138 FUSD Eaton Elementary School\4-Drawings\4 M\G1 – BLDG SITE PLAN.dwg ezequiel

APPROVALS:
APPLICATION #
?????????

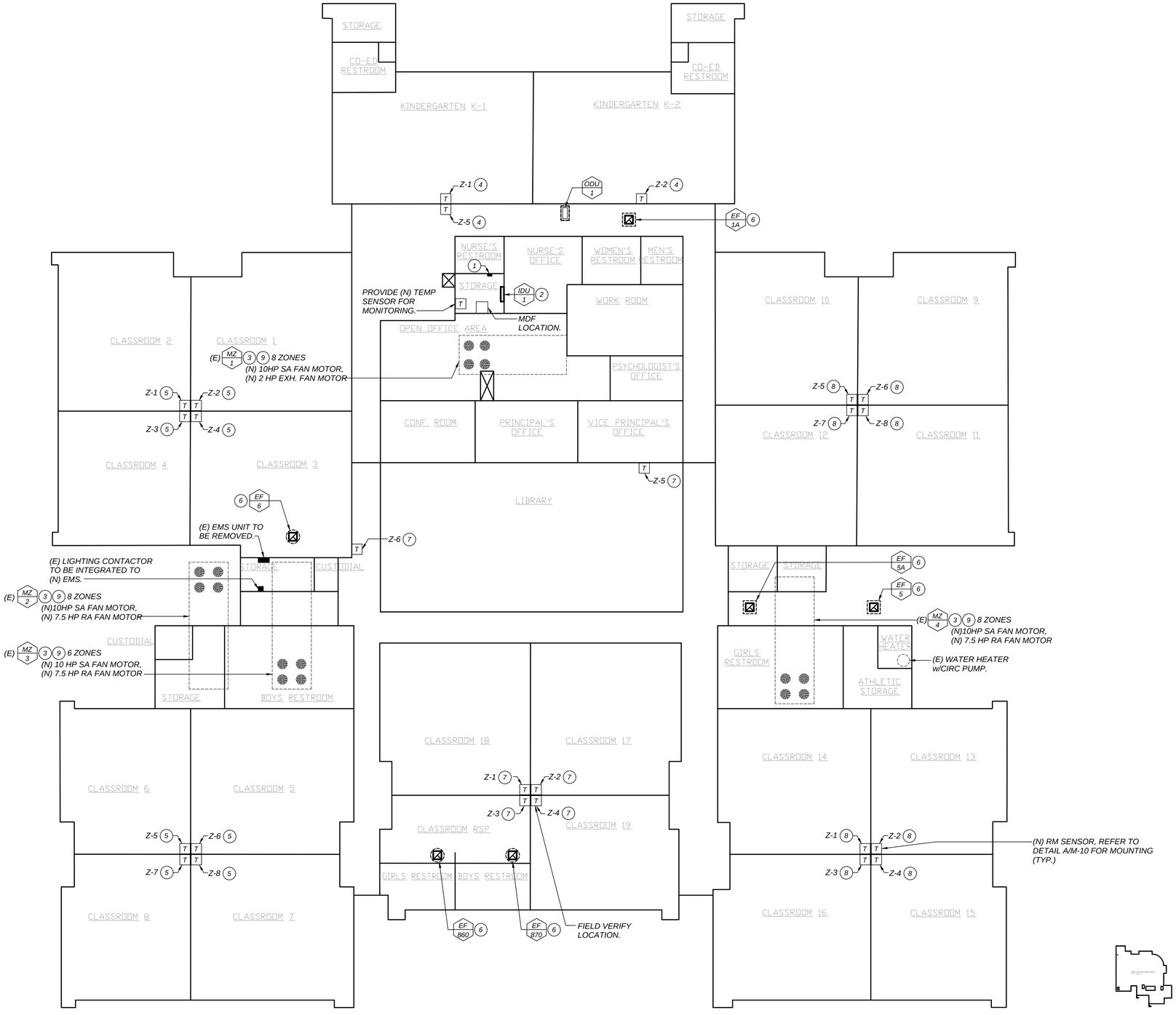

KEYNOTES: (THIS SHEET ONLY)

1. LOCATION OF (N) FX80. REFER TO DETAIL A/M-5.
2. (E) HIGH WALL MOUNTED SPLIT HEAT PUMP WITH ODU ON ROOF.
3. (E) MULTI-ZONE AIR HANDLER ON ROOF.
4. MZ 1 ZONE
5. MZ 2 ZONE
6. EXHAUST FAN ON ROOF.
7. MZ 4 ZONE
8. MZ 3 ZONE
9. REMOVE AND REPLACE (E) FAN MOTOR & ACCESSORIES w/(N) ALLEN BRADLEY VFD & COMPATIBLE MOTOR. PRE & POST AIR FLOW MEASUREMENTS TO MATCH. PROVIDE REPORTS TO MEOR.

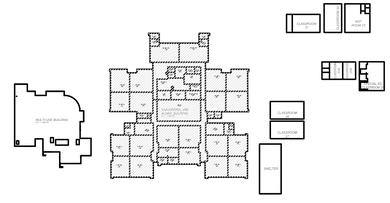

KEY PLAN

BLDG. A - CLASSROOM & ADMIN. BUILDING

SCALE: 3/32"=1'-0"

REGISTERED PROFESSIONAL ENGINEER
MICHAEL D. CANDELA
M23568
REN. 9-30-2021
MECHANICAL
STATE OF CALIFORNIA

DATE: 11-25-2020

EMS REPLACEMENT
EATON ELEMENTARY SCHOOL
1451 EAST SIERRA AVE. FRESNO, CA

FRESNO UNIFIED SCHOOL DISTRICT
4600 N. BRAWLEY AVE. FRESNO, CA.

REVISIONS

LAWRENCE ENGINEERING GROUP
7084 N. Maple Ave., Suite 101
(559) 431-0101
Fresno, CA 93720
FAX (559) 431-1362

TITLE:
BUILDING
"A" EMS
PLAN

SHEET:
M1

PROJECT 20138

17 March 2021 7:43 AM P:\2020\20138 FUSD Eaton Elementary School\4-Drawings\4 M\M1 - BLDG A CLASSROOM & ADMIN BUILDING.dwg ezequiel

APPROVALS:

APPLICATION #
?????????

KEYNOTES: (THIS SHEET ONLY)

1. (E) PACKAGE AIR UNIT ON ROOF.
2. (E) EXHAUST FAN ON ROOF.
3. (E) AIR COOLED CONDENSER ON ROOF.
4. (E) CIRCULATION PUMP TO BE INTEGRATED TO EMS THROUGH NEAREST CONTROLLER.
5. (E) DX COOLING COIL w/ C 1 ON ROOF, & (E) FURNACE.
6. (E) ELECTRIC DUCT HEATER.

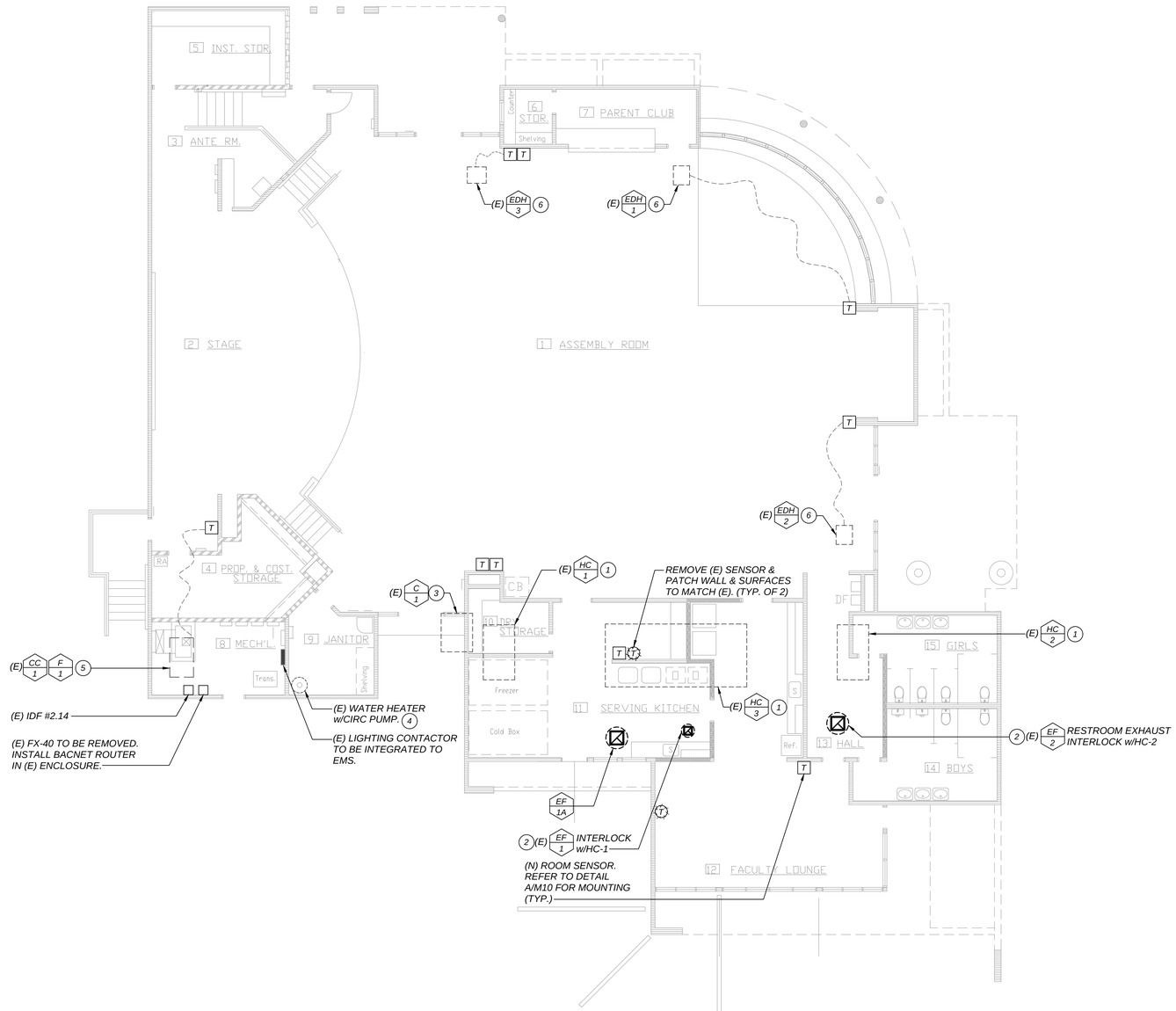

BLDG. C - MULTI-PURPOSE ROOM

SCALE: 1/8" = 1'-0"

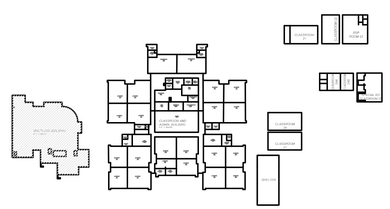

KEY PLAN

DATE: 11-25-2020

EMS REPLACEMENT
EATON ELEMENTARY SCHOOL
1451 EAST SIERRA AVE. FRESNO, CA

FRESNO UNIFIED SCHOOL DISTRICT
4600 N. BRAWLEY AVE. FRESNO, CA.

REVISIONS

LAWRENCE ENGINEERING GROUP
7084 N. Maple Ave., Suite 101
(559) 431-0101
Fresno, CA 93720
FAX (559) 431-1362

TITLE:
BUILDING
"C" EMS
PLAN

SHEET:
M2

PROJECT 20138

17 March 2021 7:43 AM P:\2020\20138 FUSD Eaton Elementary School\4-Drawings\4 M\M2 - BLDG. C MULTI-PURPOSE ROOM.dwg ezequiel

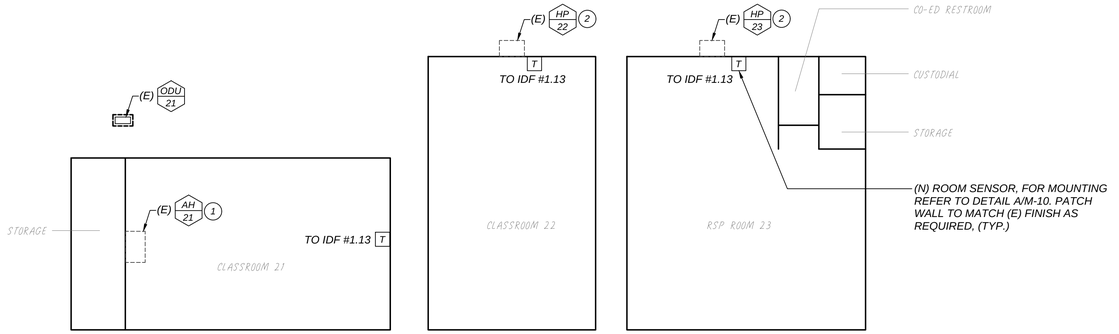

KEYNOTES: (THIS SHEET ONLY)

1. SPLIT SYSTEM WITH GAS FURNACE AND DX COOLING COIL.
2. WALL MOUNTED HEAT PUMP.

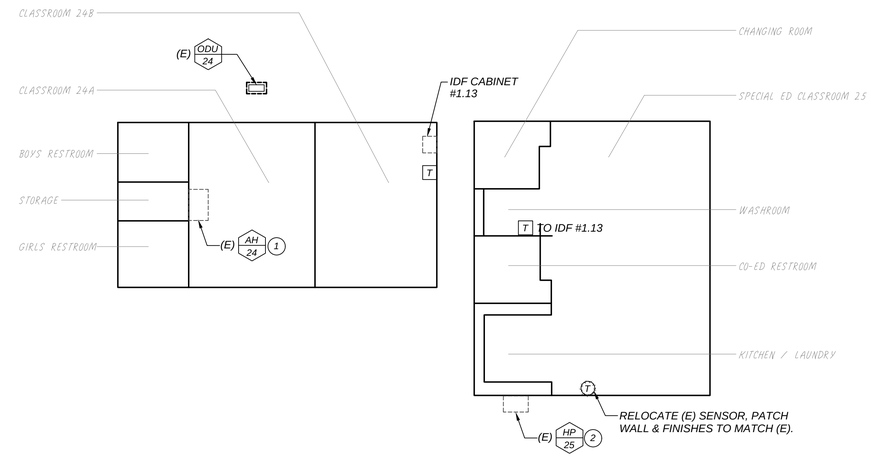

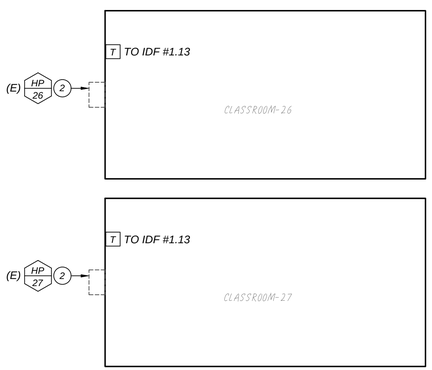

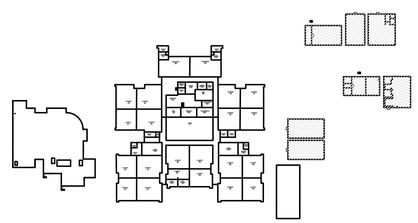

KEY PLAN

PORTABLE BUILDINGS - EMS PLAN

SCALE: 3/32"=1'-0"

APPROVALS:

APPLICATION # ?????????

REGISTERED PROFESSIONAL ENGINEER MICHAEL D. CANTERI M23568 REN. 9-30-2021 MECHANICAL STATE OF CALIFORNIA

DATE: 11-25-2020

EMS REPLACEMENT
EATON ELEMENTARY SCHOOL
1451 EAST SIERRA AVE. FRESNO, CA

FRESNO UNIFIED SCHOOL DISTRICT
4600 N. BRAWLEY AVE. FRESNO, CA.

REVISIONS

LAWRENCE ENGINEERING GROUP
7084 N. Maple Ave., Suite 101
Fresno, CA 93720
(559) 431-0101
FAX (559) 431-1362

TITLE:
PORTABLE
BUILDINGS
EMS PLAN

SHEET:
M3

PROJECT 20138

17 March 2021 7:43 AM P:\2020\20138 FUSD Eaton Elementary School\4-Drawings\4 M\M3 - PORTABLE BUILDINGS.dwg ezequiel

Sheet Notes

1. DEFAULT IP ADDRESS TO BE CHANGED DURING COMMISSIONING.
2. IP ADDRESSES TO BE PROVIDED BY FUSD.
3. A PANDUIT CJ688TGYL CONNECTOR IS REQUIRED BETWEEN ALL IP DEVICES AND THE NETWORK SWITCH.
4. BOTH ENDS OF ALL CAT-6 CABLES MUST BE LABELED WITH THE ROOM NUMBER, EQUIPMENT TYPE, AND PATCH PANEL NUMBER I.E. ROOM # ____ EQUIP. TYPE - PORT #
5. REFER TO E/M-4.

JACE Notes

HOST ID:
SERIAL NUMBER:
PRIMARY IP: 192.168.1.149 (1)
SECONDARY IP: 192.168.10.10

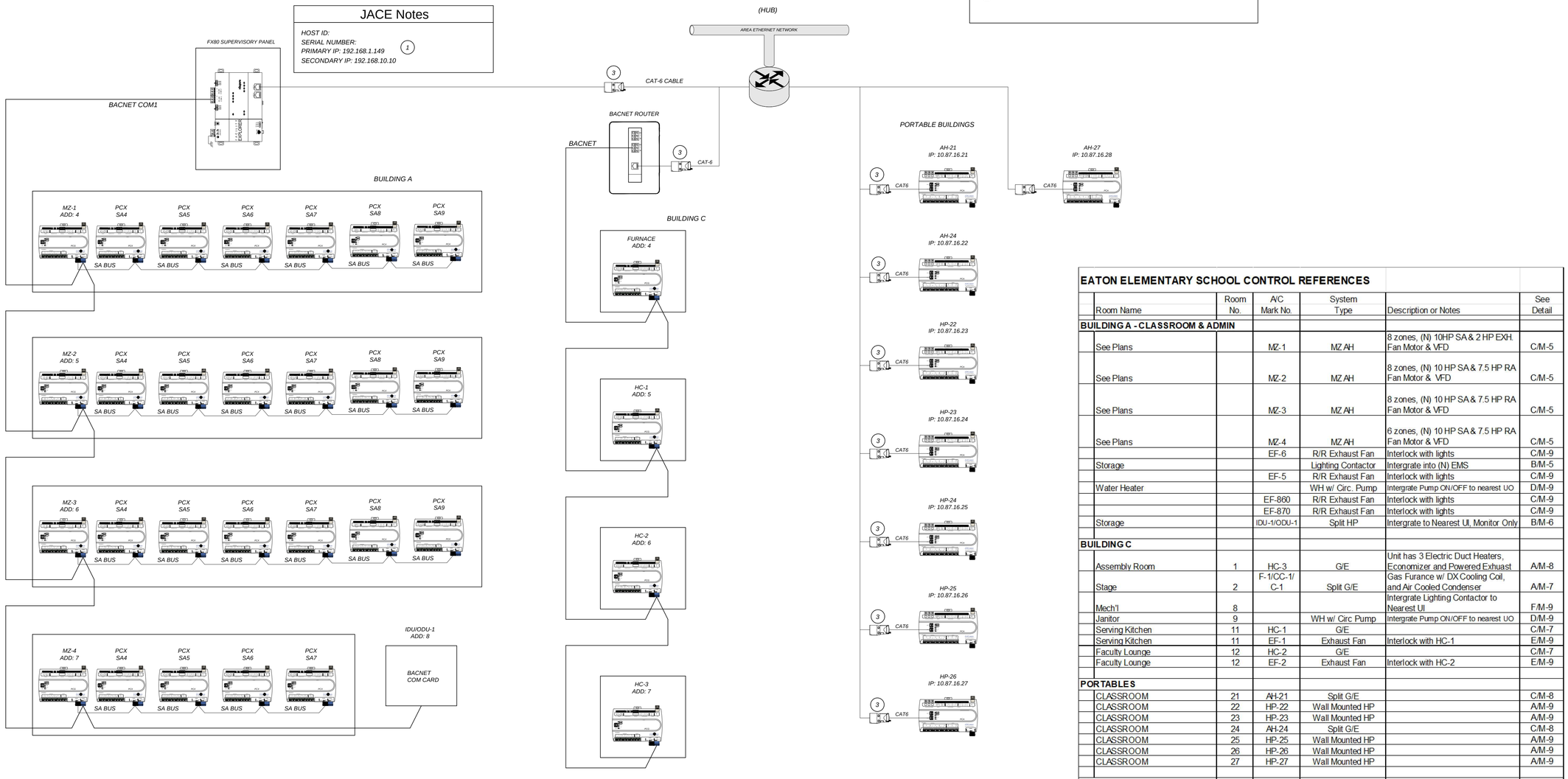

LAN ARCHITECTURE DETAIL — A / M-4

EATON ELEMENTARY SCHOOL CONTROL REFERENCES

Room Name	Room No.	A/C Mark No.	System Type	Description or Notes	See Detail
BUILDING A - CLASSROOM & ADMIN					
See Plans		MZ-1	MZ AH	8 zones, (N) 10HP SA & 2 HP EXH. Fan Motor & VFD	C/M-5
See Plans		MZ-2	MZ AH	8 zones, (N) 10 HP SA & 7.5 HP RA Fan Motor & VFD	C/M-5
See Plans		MZ-3	MZ AH	8 zones, (N) 10 HP SA & 7.5 HP RA Fan Motor & VFD	C/M-5
See Plans		MZ-4	MZ AH	6 zones, (N) 10 HP SA & 7.5 HP RA Fan Motor & VFD	C/M-5
		EF-6	R/R Exhaust Fan	Interlock with lights	C/M-9
Storage			Lighting Contactor	Intergrate into (N) EMS	B/M-5
		EF-5	R/R Exhaust Fan	Interlock with lights	C/M-9
Water Heater			WH w/ Circ. Pump	Intergrate Pump ON/OFF to nearest UO	D/M-9
		EF-860	R/R Exhaust Fan	Interlock with lights	C/M-9
		EF-870	R/R Exhaust Fan	Interlock with lights	C/M-9
Storage		IDU-1/ODU-1	Split HP	Intergrate to Nearest UI, Monitor Only	B/M-6
BUILDING C					
Assembly Room	1	HC-3	G/E	Unit has 3 Electric Duct Heaters, Economizer and Powered Exhaust	A/M-8
Stage	2	F-1/CC-1/ C-1	Split G/E	Gas Furance w/ DX Cooling Coil, and Air Cooled Condenser	A/M-7
Mech'l	8			Intergrate Lighting Contactor to Nearest UI	F/M-9
Janitor	9		WH w/ Circ. Pump	Intergrate Pump ON/OFF to nearest UO	D/M-9
Serving Kitchen	11	HC-1	G/E		C/M-7
Serving Kitchen	11	EF-1	Exhaust Fan	Interlock with HC-1	E/M-9
Faculty Lounge	12	HC-2	G/E		C/M-7
Faculty Lounge	12	EF-2	Exhaust Fan	Interlock with HC-2	E/M-9
PORTABLES					
CLASSROOM	21	AH-21	Split G/E		C/M-8
CLASSROOM	22	HP-22	Wall Mounted HP		A/M-9
CLASSROOM	23	HP-23	Wall Mounted HP		A/M-9
CLASSROOM	24	AH-24	Split G/E		C/M-8
CLASSROOM	25	HP-25	Wall Mounted HP		A/M-9
CLASSROOM	26	HP-26	Wall Mounted HP		A/M-9
CLASSROOM	27	HP-27	Wall Mounted HP		A/M-9
SITE					
Exterior Lighting					F/M-9

NOTES:
1. System Type Abbreviations: G/E - Gas Heating/Electric Cooling; HP - Heat Pump
   CP - Central Plant Hot or Chilled Water
   LS - Light Switch
   UV - Unit Ventilator
   MUA- Make-up Air
   HW- Hot Water
   DHW- Domestic Hot Water
   MZ - Multizone
   AH - Air handler
   WH- Domestic Water Heater
   Fur - Furnance

APPROVALS:
APPLICATION # ??????????

DATE: 11-25-2020

EMS REPLACEMENT
EATON ELEMENTARY SCHOOL
1451 EAST SIERRA AVE. FRESNO, CA
FRESNO UNIFIED SCHOOL DISTRICT
4600 N. BRAWLEY AVE. FRESNO, CA.

REVISIONS

LAWRENCE ENGINEERING GROUP
7084 N. Maple Ave., Suite 101
Fresno, CA 93720
(559) 431-1001
FAX (559) 431-1082

TITLE: ENERGY MANAGEMENT DETAILS

SHEET: M4

PROJECT 20138

17 March 2021 7:43 AM P:\2020\20138 FUSD Edison Elementary School\4-Drawings\1 M\M4 – CONTROLS.dwg ezequiel

NOTE: ALL WIRES INSIDE OF PANEL TO BE LABELED AS SHOWN WITH HEAT SHRINK MARKERS ON TERMINATING ENDS OF WIRE.

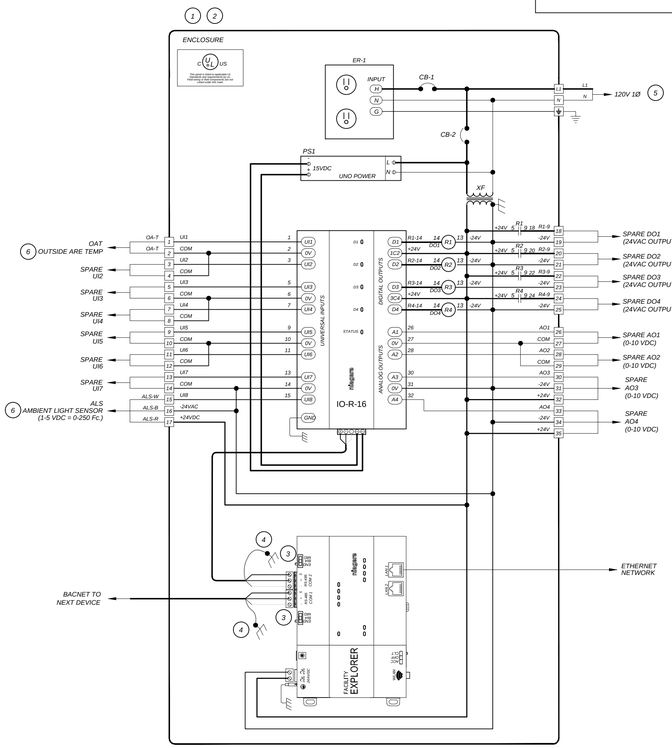

Panel Components

TAG	DESCRIPTION
FX	FX-80 CONTROLLER AND SD CARD
	FX-80 SMA
	FX-80 DEVICE LICENCE
RIO16	16 POINT REMOTE INPUT/OUTPUT EXPANSION
XF	120 - 24V TRANSFORMER
CB-1	MANUAL RESET 15.0 AMP CIRCUIT BREAKER
CB-2	MANUAL RESET 2.0 AMP CIRCUIT BREAKER
ENC	NEMA-12
ENC	PANEL BACKPLATE
ENC	PADLOCK KIT
ER-1	ELECTRICAL OUTLET
R1-R4	2-POLE 24VAC RELAY W/LED
R1-R4	2-POLE RELAY BASE
PS-1	15VDC POWER SUPPLY

Detail Notes

1. CONTROL PANEL FABRICATED BY TOTAL CONTROL CONTACT DEVEN PUTNAM AT 559-291-1000
2. PANEL SHALL BE UL LISTED
3. JACE SELECTOR SWITCH NEED TO BE SET TO THE "END" POSITION
4. RS-485 COMM BUS SHIELD TO BE GROUNDED AT THE SCP PANEL ONLY
5. LINE VOLTAGE & CONDUIT BY DIVISION 16
6. SEE DETAIL B/M-5

SUPERVISORY SCP SCHEMATIC DETAIL — A / M-5

Control Components

TAG	DESCRIPTION
CDAT,HDAT	DUCT TEMP SENSOR
OAT	OUTSIDE AIR SENSOR
MAT	AVERAGING DUCT TEMP SENSOR
OAD/RAD	SPRING RETURN DAMPER ACTUATOR
PFDP	PRESSURE TRANSDUCER
SFVFD	(N) VARIABLE FREQUENCY DRIVE

Detail Notes

1. LINE VOLTAGE & CONDUIT BY DIVISION 16.
2. CONTROL COMPONENTS PROVIDED BY TOTAL CONTROL CONTACT DEVEN PUTNAM AT 559-291-1000.
3. REFER TO DETAIL D/M5 FOR ZONE CONTROL DETAIL.
4. PROVIDE (N) ACTUATOR, FIELD VERIFY QUANITY.
5. (N) VARIBLE FREQUENCY DRIVE AND MOTOR

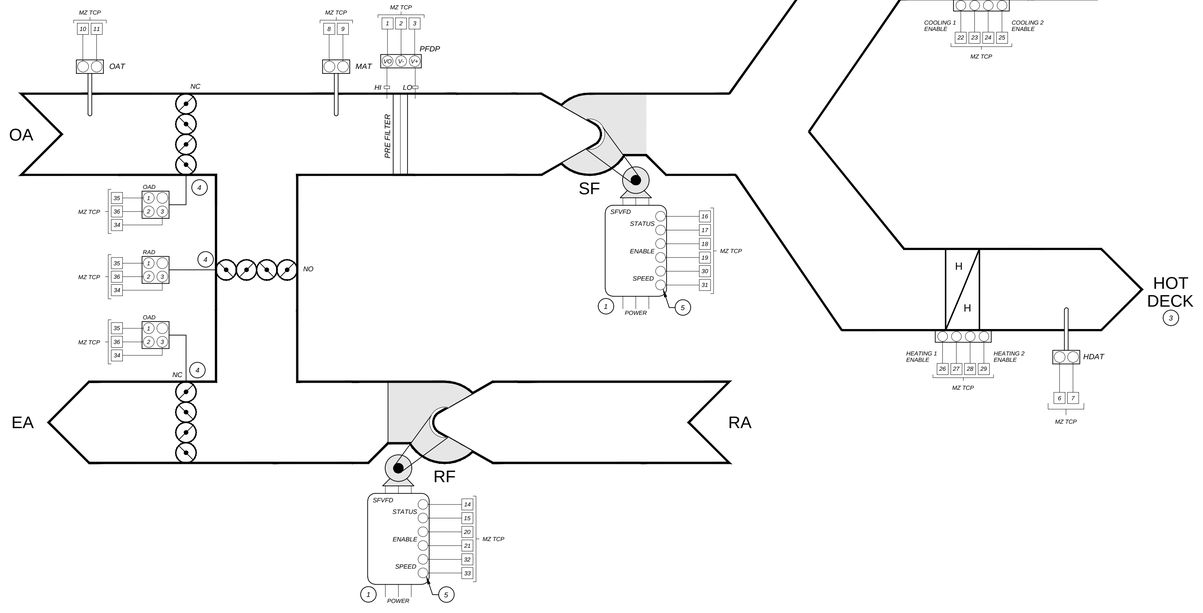

MULTI-ZONE CONTROL DETAIL — C / M-5

Control Components

TAG	DESCRIPTION
ALS	AMBIENT LIGHT SENSOR
OAT	10K TYPE 3 OUTDOOR SENSOR

Detail Notes

1. LOCATE AMBIENT LIGHT SENSOR AT NORTHERN EXPOSURE OF BUILDING.
2. SEE DETAIL A/M-5

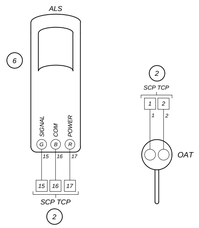

OUTDOOR PHOTOCELL AND TEMP SENSOR DETAIL — B / M-5

Control Components

TAG	DESCRIPTION
NZS	ZONE SENSOR W/ SETPOINT ADJUSTMENT
DAT	-
ZNDA	-

Detail Notes

1. LINE VOLTAGE & CONDUIT BY DIVISION 16.
2. CONTROL COMPONENTS PROVIDED BY TOTAL CONTROL CONTACT DEVEN PUTNAM AT 559-291-1000.
3. PROVIDE (N) ACTUATOR.

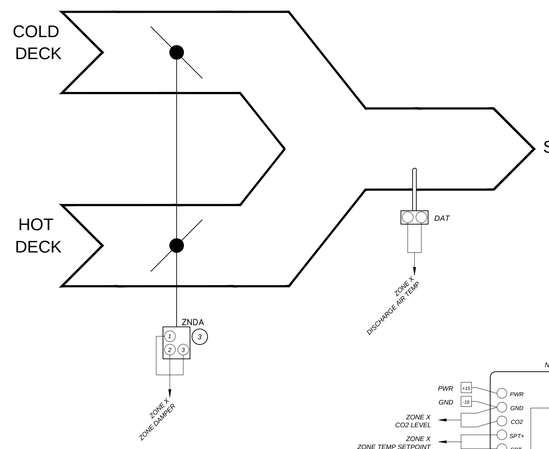

ZONE CONTROL DETAIL — D / M-5

APPROVALS:

APPLICATION # ??????????

REGISTERED PROFESSIONAL ENGINEER — MICHAEL D. GRIMES — M28568 — REN. 9-30-2021 — MECHANICAL — STATE OF CALIFORNIA

DATE: 11-25-2020

EMS REPLACEMENT
EATON ELEMENTARY SCHOOL
1451 EAST SIERRA AVE. FRESNO, CA

FRESNO UNIFIED SCHOOL DISTRICT
4600 N. BRAWLEY AVE. FRESNO, CA.

REVISIONS

LAWRENCE ENGINEERING GROUP
7084 N. Maple Ave., Suite 101
(559) 431-0101
Fresno, CA 93720
FAX (559) 431-3862

TITLE: ENERGY MANAGEMENT DETAILS

SHEET: M5

PROJECT 20138

17 March 2021 7:44 AM P:\2020\20138 FUSD Eaton Elementary School\4-Drawings\4 M\M5 - CONTROLS.dwg ezequiel

NOTE: ALL WIRES INSIDE OF PANEL TO BE LABELED AS SHOWN WITH HEAT SHRINK MARKERS ON TERMINATING ENDS OF WIRE.

Sheet Notes

1. CONTROL PANELS FABRICATED BY TOTAL CONTROL CONTACT DEVEN PUTNAM AT 559-291-1000
2. PANEL SHALL BE UL LISTED
3. LINE VOLTAGE AND CONDUIT BY DIVISION 16.

Panel Components

TAG	DESCRIPTION
PCG	GENERAL PROGRAMMABLE CONTROLLER
ENC	NEMA-4 ENCLOSURE
ENC	SOLID PANEL BACKPLATE
ENC	PANEL LOCK KIT
CB-1	2.0 AMP CIRCUIT BREAKER
XF	96VA 24VAC TRANSFORMER
R1-R6	2-POLE 24VAC RELAY W/ LED
R1-R6	2-POLE RELAY BASE
PCX	I/O EXPANSION MODULE
PS-1	15VDC POWER SUPPLY

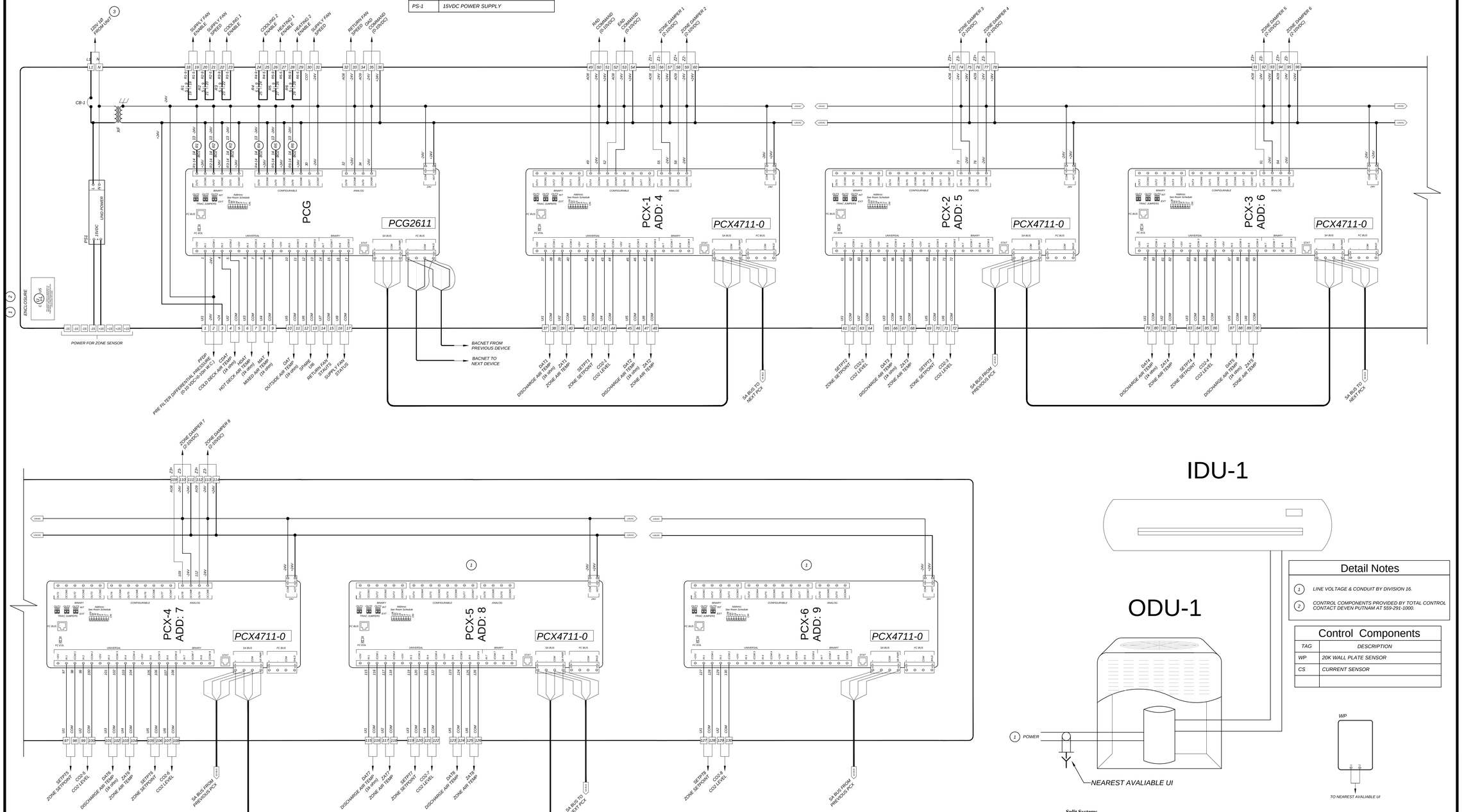

MULTI-ZONE SCHEMATIC DETAIL P1

A
M-6

Detail Notes

1. LINE VOLTAGE & CONDUIT BY DIVISION 16.
2. CONTROL COMPONENTS PROVIDED BY TOTAL CONTROL CONTACT DEVEN PUTNAM AT 559-291-1000.

Control Components

TAG	DESCRIPTION
WP	20K WALL PLATE SENSOR
CS	CURRENT SENSOR

Split Systems

Unit will be controlled by factory controller, BAS for temp monitoring only with alarms at district set thresholds. Unit will run 24/7.

ODU/IDU CONTROL DETAIL

B
M-6

APPROVALS:

APPLICATION # ?????????

REGISTERED PROFESSIONAL ENGINEER
MICHAEL D. CANDELA
M23568
REN. 9-30-2021
MECHANICAL
STATE OF CALIFORNIA

DATE: 11-25-2020

EMS REPLACEMENT
EATON ELEMENTARY SCHOOL
1451 EAST SIERRA AVE. FRESNO, CA

FRESNO UNIFIED SCHOOL DISTRICT
4600 N. BRAWLEY AVE. FRESNO, CA.

REVISIONS

LAWRENCE ENGINEERING GROUP
7084 N. Maple Ave., Suite 101
(559) 431-0101
Fresno, CA 93720
FAX (559) 431-1362

TITLE: ENERGY MANAGEMENT DETAILS

SHEET: M6

PROJECT 20138

17 March 2021 7:44 AM P:\2020\20138 FUSD Eaton Elementary School\4-Drawings\4 M\M6 - CONTROLS.dwg ezequiel

Control Components	
TAG	DESCRIPTION
DAT	DUCT TEMP SENSOR
SFCS/CUCS	CURRENT SENSOR
RIB	24VAC RELAY IN A BOX
NZS	NETWORK ZONE SESNOR W/ CO_2

Detail Notes	
1	LINE VOLTAGE & CONDUIT BY DIVISION 16.
2	UNIT SHALL SHUT DOWN UPON DETECTION OF SMOKE. WIRE ACCORDINGLY.
3	CONTROL COMPONENTS PROVIDED BY TOTAL CONTROL CONTACT DEVEN PUTNAM AT 559-291-1000.
4	SEE DETAIL B/M-7 FOR TCP DIAGRAM.

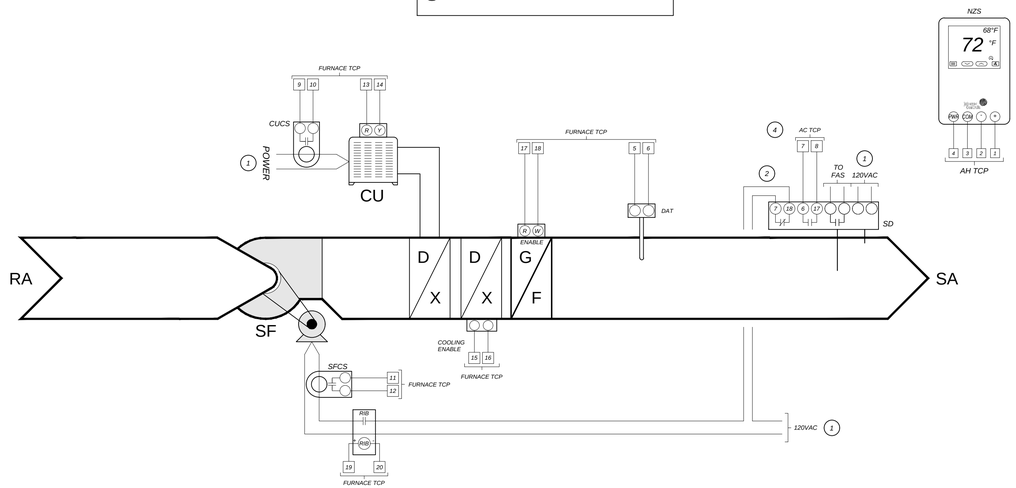

FURNACE C1/F-1 CONTROL DETAIL

A / M-7

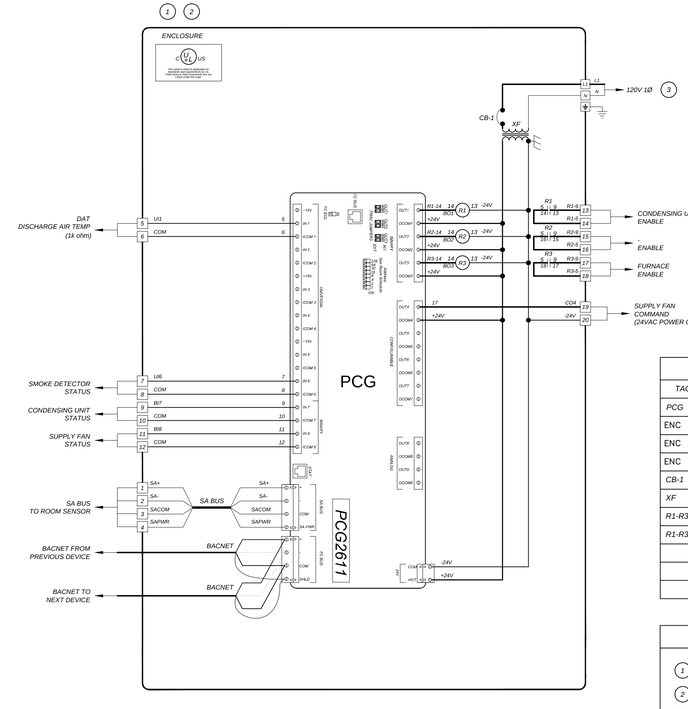

Panel Components	
TAG	DESCRIPTION
PCG	GENERAL PROGRAMMABLE CONTROLLER
ENC	NEMA 4 ENCLOSURE
ENC	BACKPLATE ENCLOSURE
ENC	PANEL LOCK KIT
CB-1	2.0 AMP CIRCUIT BREAKER
XF	96VA 24VAC TRANSFORMER
R1-R3	2-POLE 24VAC RELAY W/ LED
R1-R3	2-POLE RELAY BASE

Detail Notes	
1	CONTROL PANELS FABRICATED BY TOTAL CONTROL CONTACT DEVEN PUTNAM AT 559-291-1000
2	PANEL SHALL BE UL LISTED
3	LINE VOLTAGE AND CONDUIT BY DIVISION 16.

FURNACE TCP SCHEMATIC DETAIL

B / M-7

Control Components	
TAG	DESCRIPTION
DAT	DUCT TEMP SENSOR
CCS,SFCS	CURRENT SENSOR
NZS	NETWORK ZONE SENSOR W/ CO_2
OAD/RAD	SPRING RETURN DAMPER ACTUATOR

Detail Notes	
1	LINE VOLTAGE & CONDUIT BY DIVISION 16.
2	OAT GLOBALLY SHARED SOFTWARE POINT
3	CONTROL COMPONENTS PROVIDED BY TOTAL CONTROL CONTACT DEVEN PUTNAM AT 559-291-1000.
4	SEE DETAIL D/M-7 FOR TCP DIAGRAM.

Package Unit

A thermostat shall be mounted in the space.

Occupied Cool Setpoint: 75°F (adjustable)

Occupied Heat Setpoint: 68°F (adjustable)

Warm/Cool Adjustment: +3°/-3°

Unoccupied Mode: The unit shall remain OFF in unoccupied mode.

Occupied Mode: The unit shall receive an occupied command from the Johnson FX Supervisory controller. The supply fan will be enabled. A current sensor on the supply fan shall prove supply fan run status. When the run status is proven ON, the following modes shall be allowed to happen.

Cooling Mode: When outside air is above the OA cooling lockout setpoint (65° F adjustable) and there is a call for cooling, the compressor shall stage on in order to satisfy the condition. Compressor shall be monitored with a current sensor to prove that the compressor is running.

Heating Mode: When outside air is below the OA heating lockout setpoint (60° F adjustable) and there is a call for heating the reversing valve shall stage on in order to satisfy the condition.

Demand Control Ventilation: CO2 readings shall come from the wall mount Temp/CO2 sensor. If the zone CO2 PPM reaches 800 ppm (adj.), the economizer shall modulate open to the maximum outdoor air position to satisfy the demand. Once the CO2 level drops below 800 ppm (adj.) , the economizer shall close to the minimum outdoor air position.

CO2 Monitoring: If CO2 in the space rises above CO2 alarm setpoint (adj.), the system will generate a Niagara alarm.

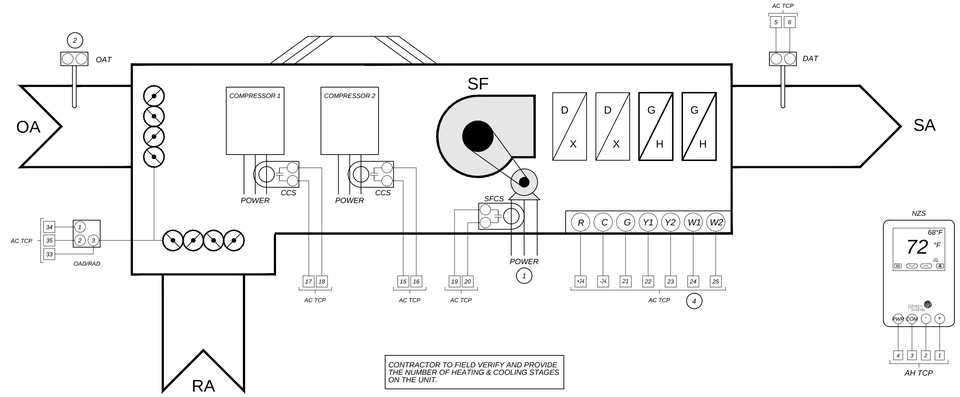

ROOF TOP UNIT CONTROL

C / M-7

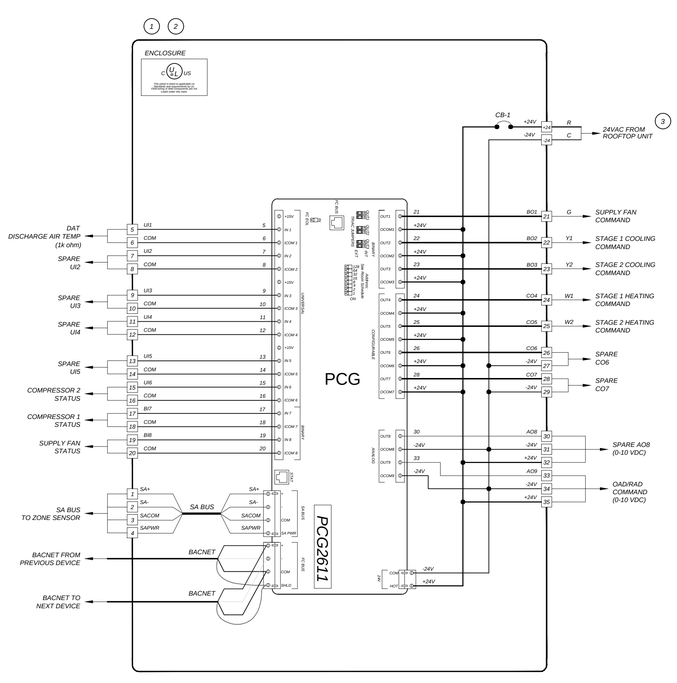

NOTE: ALL WIRES INSIDE OF PANEL TO BE LABELED AS SHOWN WITH HEAT SHRINK MARKERS ON TERMINATING ENDS OF WIRE.

Panel Components	
TAG	DESCRIPTION
PCG	GENERNAL PROGRAMMABLE CONTROLLER
ENC	NEMA 4 ENCLOSURE
ENC	BACKPLATE ENCLOSURE
ENC	PANEL LOCK KIT
CB-1	2.0 AMP CIRCUIT BREAKER

Detail Notes	
1	CONTROL PANEL FABRICATED BY TOTAL CONTROL CONTACT DEVEN PUTNAM 559-291-1000
2	PANEL SHALL BE UL LISTED
3	LINE VOLTAGE & CONDUIT BY DIVISION 16.

ROOF TOP UNIT TCP SCHEMATIC

D / M-7

APPROVALS:

APPLICATION # ??????????

REGISTERED PROFESSIONAL ENGINEER — DANIEL D. CHOATE — No. 28568 — REN. 9-30-2021 — MECHANICAL — STATE OF CALIFORNIA

DATE: 11-25-2020

EMS REPLACEMENT
EATON ELEMENTARY SCHOOL
1451 EAST SIERRA AVE. FRESNO, CA

FRESNO UNIFIED SCHOOL DISTRICT
4600 N. BRAWLEY AVE. FRESNO, CA.

REVISIONS

LAWRENCE ENGINEERING GROUP
Fresno, CA 93720
FAX: (559) 431-1082
7084 N. Maple Ave., Suite 101
(559) 431-1000

TITLE: ENERGY MANAGEMENT DETAILS

SHEET: M7

PROJECT 20138

17 March 2021 7:44 AM P:\2020\20138 FUSD Eaton Elementary School\4-Drawings\4 M\M7 – CONTROLS.dwg ezequiel

APPROVALS:

APPLICATION # ??????????

DATE: 11-25-2020

Control Components

TAG	DESCRIPTION
DAT,MAT,RAT	DUCT TEMP SENSOR
CCS,SFCS	CURRENT SENSOR
NZS	NETWORK ZONE SENSOR WITH CO2
OAD/RAD	SPRING RETURN DAMPER ACTUATOR
BSP	PRESSURE TRANSDUCER

Sheet Notes

1. LINE VOLTAGE & CONDUIT BY DIVISION 16.
2. OAT GLOBALLY SHARED SOFTWARE POINT
3. CONTROL COMPONENTS PROVIDED BY TOTAL CONTROL CONTACT DEVEN PUTNAM AT 559-291-1000.
4. SEE DETAIL B/M8 FOR TCP DIAGRAM.

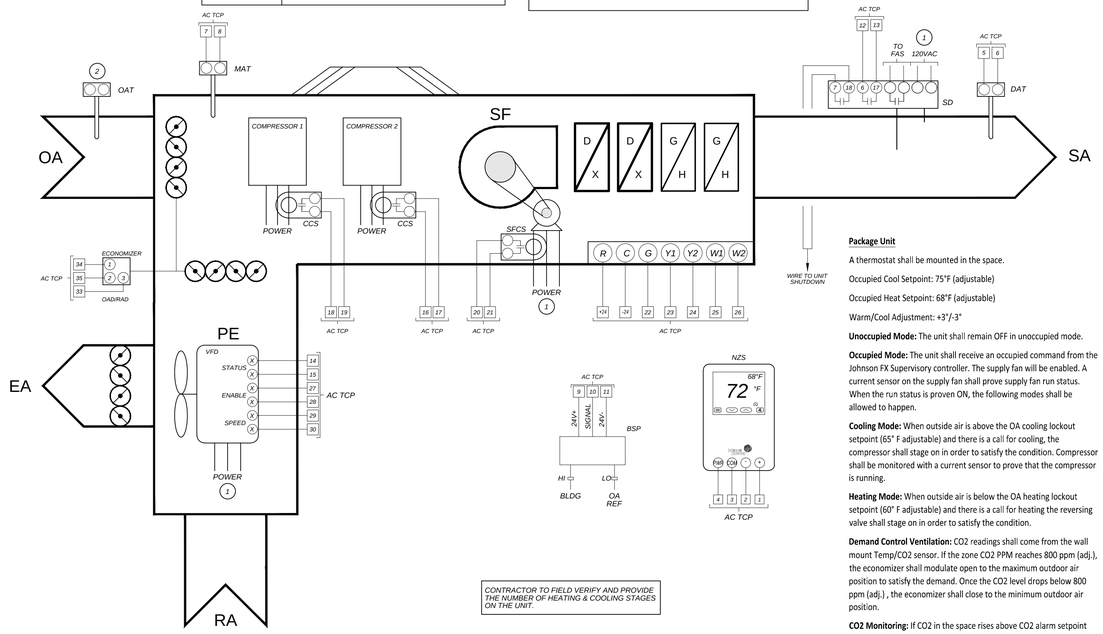

Package Unit

A thermostat shall be mounted in the space.

Occupied Cool Setpoint: 75°F (adjustable)

Occupied Heat Setpoint: 68°F (adjustable)

Warm/Cool Adjustment: +3°/-3°

Unoccupied Mode: The unit shall remain OFF in unoccupied mode.

Occupied Mode: The unit shall receive an occupied command from the Johnson FX Supervisory controller. The supply fan will be enabled. A current sensor on the supply fan shall prove supply fan run status. When the run status is proven ON, the following modes shall be allowed to happen.

Cooling Mode: When outside air is above the OA cooling lockout setpoint (65° F adjustable) and there is a call for cooling, the compressor shall stage on in order to satisfy the condition. Compressor shall be monitored with a current sensor to prove that the compressor is running.

Heating Mode: When outside air is below the OA heating lockout setpoint (60° F adjustable) and there is a call for heating the reversing valve shall stage on in order to satisfy the condition.

Demand Control Ventilation: CO2 readings shall come from the wall mount Temp/CO2 sensor. If the zone CO2 PPM reaches 800 ppm (adj.), the economizer shall modulate open to the maximum outdoor air position to satisfy the demand. Once the CO2 level drops below 800 ppm (adj.) , the economizer shall close to the minimum outdoor air position.

CO2 Monitoring: If CO2 in the space rises above CO2 alarm setpoint (adj.), the system will generate a Niagara alarm.

CONTRACTOR TO FIELD VERIFY AND PROVIDE THE NUMBER OF HEATING & COOLING STAGES ON THE UNIT.

Control Components

TAG	DESCRIPTION
DAT,MAT,RAT	DUCT TEMP SENSOR
OAD/RAD	SPRING RETURN DAMPER ACTUATOR
NZS	NETWORK ZONE SESNOR W/ CO_2

Detail Notes

1. LINE VOLTAGE & CONDUIT BY DIVISION 16.
2. OAT GLOBALLY SHARED SOFTWARE POINT
3. CONTROL COMPONENTS PROVIDED BY TOTAL CONTROL CONTACT DEVEN PUTNAM AT 559-291-1000.
4. SEE DETAIL D/M-8 FOR TCP DIAGRAM.

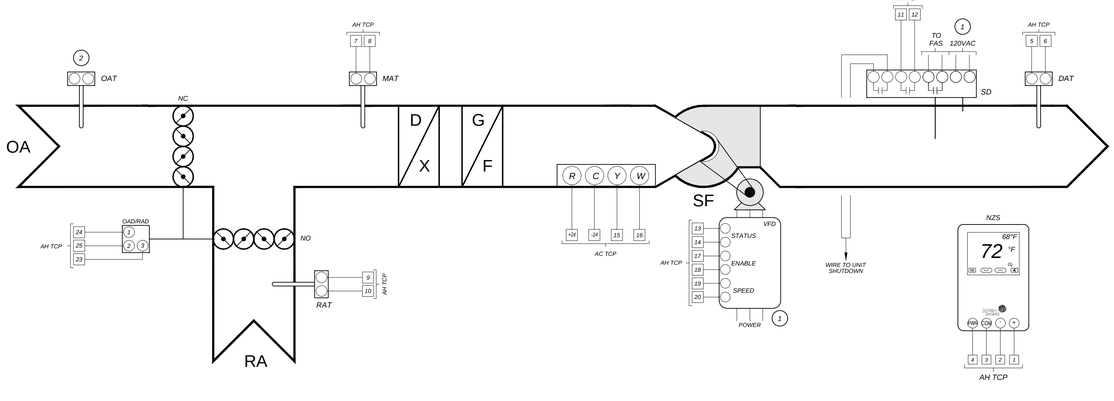

ROOF TOP UNIT CONTROL DETAIL

(A / M-8)

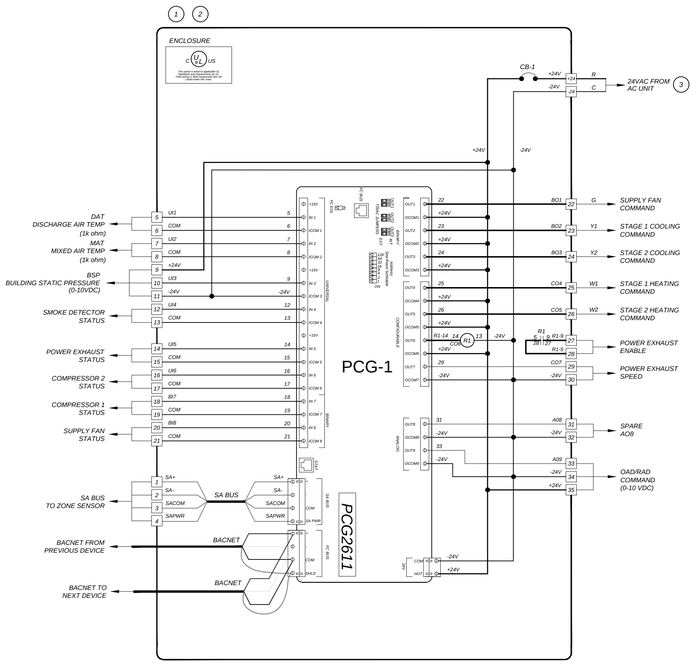

ROOF TOP UNIT TCP SCHEMATIC DETAIL

(B / M-8)

NOTE: ALL WIRES INSIDE OF PANEL TO BE LABELED AS SHOWN WITH HEAT SHRINK MARKERS ON TERMINATING ENDS OF WIRE.

Panel Components

TAG	DESCRIPTION
PCG	GENERNAL PROGRAMMABLE CONTROLLER
ENC	NEMA 4 ENCLOSURE
ENC	BACKPLATE ENCLOSURE
ENC	PANEL LOCK KIT
CB-1	2.0 AMP CIRCUIT BREAKER
R1	2-POLE 24VAC RELAY W/ LED
R1	2-POLE RELAY BASE

Sheet Notes

1. CONTROL PANEL FABRICATED BY TOTAL CONTROL CONTACT DEVEN PUTNAM AT 559-291-1000
2. PANEL SHALL BE UL LISTED
3. LINE VOLTAGE & CONDUIT BY DIVISION 16.

AIR HANDLER CONTROL DETAIL

(C / M-8)

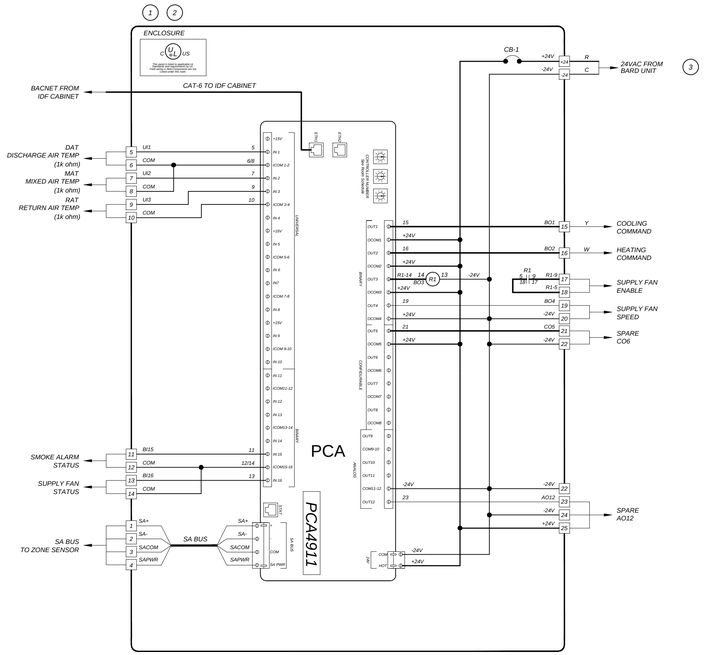

NOTE: ALL WIRES INSIDE OF PANEL TO BE LABELED AS SHOWN WITH HEAT SHRINK MARKERS ON TERMINATING ENDS OF WIRE.

Panel Components

TAG	DESCRIPTION
PCA	ADVANCED PROGRAMMABLE CONTROLLER
ENC	NEMA 4 ENCLOSURE
ENC	BACKPLATE ENCLOSURE
ENC	PANEL LOCK KIT
CB-1	MANUAL RESET 2.0 AMP CIRCUIT BREAKER
R1	2-POLE 24VAC RELAY W/ LED
R1	2-POLE RELAY BASE

Detail Notes

1. CONTROL PANEL FABRICATED BY TOTAL CONTROL CONTACT DEVEN PUTNAM AT 559-291-1000.
2. PANEL SHALL BE UL LISTED
3. LINE VOLTAGE & CONDUIT BY DIVISION 16.

AIR HANDLER TCP SCHEMATIC DETAIL

(D / M-8)

EMS REPLACEMENT
EATON ELEMENTARY SCHOOL
1451 EAST SIERRA AVE. FRESNO, CA

FRESNO UNIFIED SCHOOL DISTRICT
4600 N. BRAWLEY AVE. FRESNO, CA.

REVISIONS

LAWRENCE ENGINEERING GROUP
Fresno, CA 93720
FAX (559) 431-2362
7084 N. Maple Ave., Suite 101
(559) 431-0101

TITLE: ENERGY MANAGEMENT DETAILS

SHEET: M8

PROJECT 20138

17 March 2021 7:44 AM P:\2020\20138 FUSD Eaton Elementary School\4-Drawings\4 M\M8 – CONTROLS.dwg ezequiel

Control Components	
TAG	DESCRIPTION
DAT	DUCT TEMP SENSOR
SFCS,CCS	CURRENT SENSOR
NZS	NETWORK ZONE SESNOR W/ CO_2

Detail Notes	
1	LINE VOLTAGE & CONDUIT BY DIVISION 16.
2	CONTROL COMPONENTS PROVIDED BY TOTAL CONTROL CONTACT DEVEN PUTNAM AT 559-291-1000
3	SEE DETAIL B/M-9 FOR TCP DIAGRAM.

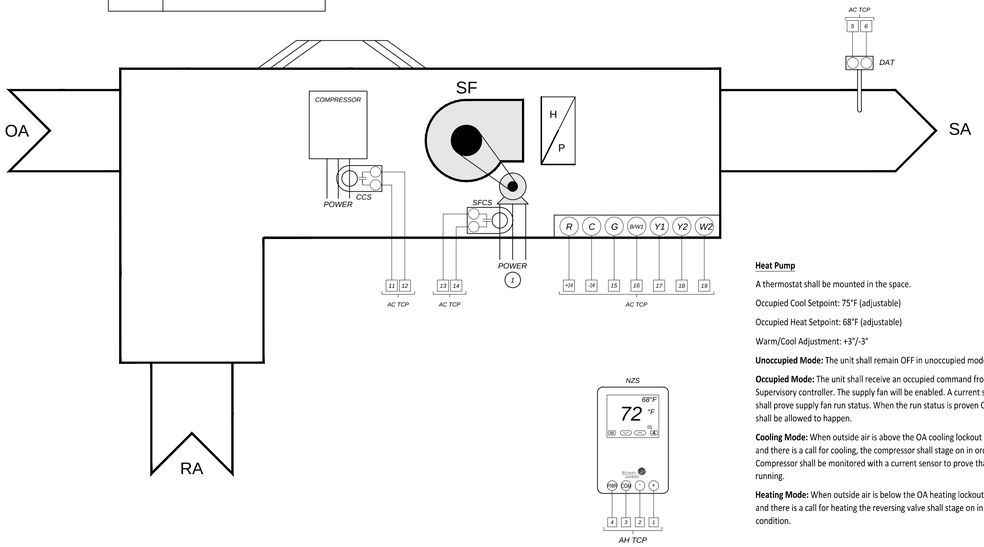

Heat Pump

A thermostat shall be mounted in the space.

Occupied Cool Setpoint: 75°F (adjustable)

Occupied Heat Setpoint: 68°F (adjustable)

Warm/Cool Adjustment: +3°/-3°

Unoccupied Mode: The unit shall remain OFF in unoccupied mode.

Occupied Mode: The unit shall receive an occupied command from the Johnson FX Supervisory controller. The supply fan will be enabled. A current sensor on the supply fan shall prove supply fan run status. When the run status is proven ON, the following modes shall be allowed to happen.

Cooling Mode: When outside air is above the OA cooling lockout setpoint (65° F adjustable) and there is a call for cooling, the compressor shall stage on in order to satisfy the condition. Compressor shall be monitored with a current sensor to prove that the compressor is running.

Heating Mode: When outside air is below the OA heating lockout setpoint (60° F adjustable) and there is a call for heating the reversing valve shall stage on in order to satisfy the condition.

WALL MOUNTED HEAT PUMP CONTROL DETAIL

A / M-9

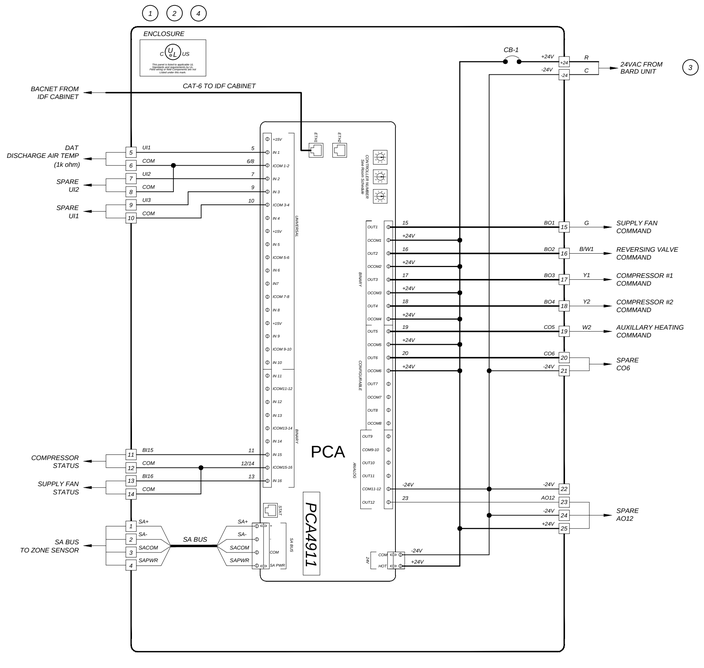

WALL MOUNTED HEAT PUMP TCP SCHEMATIC DETAIL

B / M-9

NOTE: ALL WIRES INSIDE OF PANEL TO BE LABELED AS SHOWN WITH HEAT SHRINK MARKERS ON TERMINATING ENDS OF WIRE.

Panel Components	
TAG	DESCRIPTION
PCA	ADVANCED PROGRAMMABLE CONTROLLER
CB-1	MANUAL RESET 2.0 AMP CIRCUIT BREAKER
ENC	NEMA 4 ENCLOSURE
ENC	BACKPLATE ENCLOSURE
ENC	PANEL LOCK KIT
TCP	TCP LABEL

Detail Notes	
1	CONTROL PANEL FABRICATED BY TOTAL CONTROL CONTACT DEVEN PUTNAM AT 559-291-1000.
2	PANEL SHALL BE UL LISTED
3	LINE VOLTAGE & CONDUIT BY DIVISION 16.
4	CONTRACTOR TO LOCATE TCP PANEL ON INTERIOR SIDE OF WALL. BEFORE INSTALLING PROPOSE AND OBTAIN DISTRICT APPROVAL FOR (N) PANEL LOCATION.

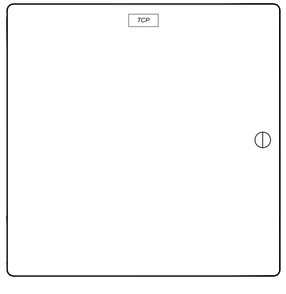

PANEL DOOR LAYOUT

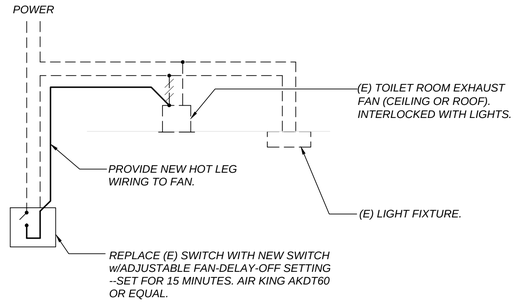

LIGHT / EXHAUST TIMER SWITCH

C / M-9

SCALE: NONE

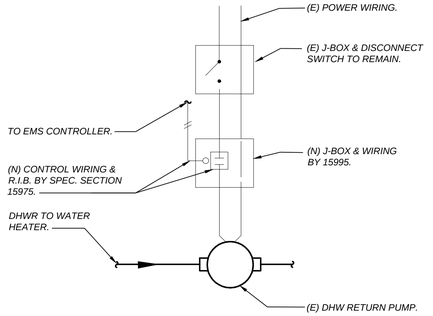

DOMESTIC H.W.R. PUMP CONTROL

D / M-9

SCALE: NONE

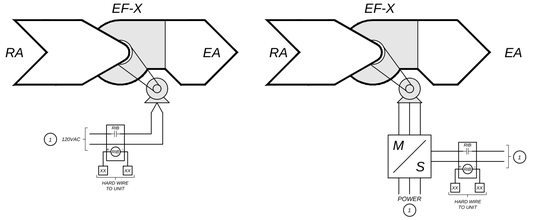

EXHAUST FAN INTERLOCK CONTROL

E / M-9

SCALE: NONE

Detail Notes	
1	LINE VOLTAGE & CONDUIT BY DIVISION 16.

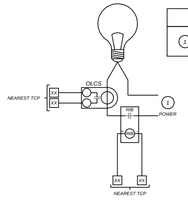

LIGHTING CONTROL

EXTERIOR LIGHTING CONTROL DETAIL

F / M-9

SCALE: NONE

APPROVALS:

APPLICATION # ??????????

REGISTERED PROFESSIONAL ENGINEER — MICHAEL D. GRIFFIN — No. M28568 — RENEWAL 9-30-2021 — MECHANICAL — STATE OF CALIFORNIA

DATE: 11-25-2020

EMS REPLACEMENT
EATON ELEMENTARY SCHOOL
1451 EAST SIERRA AVE. FRESNO, CA

FRESNO UNIFIED SCHOOL DISTRICT
4600 N. BRAWLEY AVE. FRESNO, CA.

REVISIONS

LAWRENCE ENGINEERING GROUP
7084 N. Maple Ave., Suite 101
Fresno, CA 93720
(559) 432-1001
FAX (559) 432-1582

TITLE: ENERGY MANAGEMENT DETAILS

SHEET: M9

PROJECT 20138

17 March 2021 7:44 AM P:\2020\20138 FUSD Edon Elementary School\4-Drawings\4 M\M9 – CONTROLS.dwg ezequiel

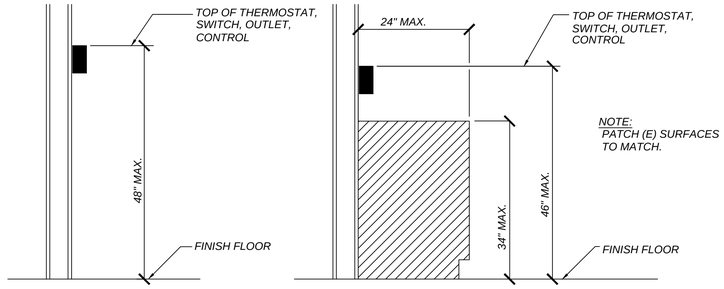

MOUNTING HEIGHT OVER OBSTRUCTION

THERMOSTAT MOUNTING

SCALE: NONE

A
M-10

Router Panel Components	
TAG	DESCRIPTION
CB-1	2.0 AMP CIRCUIT BREAKER
BASRT-B	BACNET/IP MS/TP ROUTER
XF	50A 24VAC TRANSFORMER
ENC	12X12 NEMA 1 ENCLOSURE WITH BACKPLATE

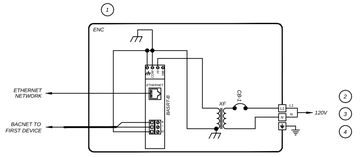

Detail Notes	
1	CONTROL PANEL FABRICATED BY TOTAL CONTROL CONTACT DEVEN PUTNAM AT 559-291-1000.
2	LINE VOLTAGE & CONDUIT BY DIVISION 16.
3	FOR PORTABLE BLDG, PROVIDE AND INSTALL A DEDICATED 20A/1P CIRCUIT BREAKER TO THE PORTABLE BUILDING PANEL.
4	FOR PERMANENT BLDG, CONNECT ROUTER TO (E) CIRCUIT.

BACNET/IP MS/TP ROUTER PANEL DETAIL

SCALE: NONE

B
M-10

APPROVALS:

APPLICATION #
??????????

DATE: 11-25-2020

EMS REPLACEMENT
EATON ELEMENTARY SCHOOL
1451 EAST SIERRA AVE. FRESNO, CA

FRESNO UNIFIED SCHOOL DISTRICT
4600 N. BRAWLEY AVE. FRESNO, CA.

REVISIONS

LAWRENCE
ENGINEERING GROUP
7084 N. Maple Ave., Suite 101
(559) 431-0101
Fresno, CA 93720
FAX (559) 431-1362

TITLE:
ENERGY
MANAGEMENT
DETAILS

SHEET:
M10

PROJECT 20138

17 March 2021 7:44 AM P:\2020\20138 FUSD Eaton Elementary School\4-Drawings\4 M\M10 - CONTROLS.dwg ezequiel

GENERAL ELECTRICAL NOTES:

1. ALL WORK SHALL MEET THE LATEST ADOPTED ADDITIONS OF THE CALIFORNIA CODE OF REGULATIONS, TITLE 24 AND ALL OTHER APPLICABLE REGULATIONS, WHICH INCLUDE:

CALIFORNIA BUILDING CODE	2019
CALIFORNIA ELECTRICAL CODE	2019
NON RESIDENTIAL CEC ENERGY STANDARDS	2019

   NOTHING IN THE PLANS OR SPECIFICATIONS IS TO BE CONSTRUED TO PERMIT WORK NOT CONFORMING TO THESE CODES.

2. IT IS THE INTENTION OF THESE PLANS AND SPECIFICATIONS TO COVER EVERYTHING REQUIRED TO PROVIDE FOR COMPLETE AND OPERATIVE SYSTEMS. THE CONTRACTOR IS TO FURNISH LABOR, MATERIAL, TRANSPORTATION, EQUIPMENT, MISCELLANEOUS SERVICES, ETC. REQUIRED TO ACCOMPLISH THIS RESULT. ANYTHING WHICH MAY BE REASONABLY CONSTRUED AS A NECESSARY PART OF THE INSTALLATION IS TO BE INCLUDED, WHETHER OR NOT SPECIFICALLY SHOWN OR MENTIONED.

3. THE CONTRACTOR SHALL EXAMINE THE SITE AND EXISTING CONDITIONS AND MAKE ALLOWANCES IN THE BID FOR ANY CONDITIONS NOT SHOWN ON THE ELECTRICAL DOCUMENTS.

4. ELECTRICAL ROUTING IS DIAGRAMMATIC ONLY. ACTUAL ROUTING & PHYSICAL CONDITIONS MAY VARY. THE CONTRACTOR IS RESPONSIBLE FOR DETERMINING THE ACTUAL ROUTING, CONNECTIONS, & PROVISION OF ALL APPURTENANCES NECESSARY FOR A COMPLETE & OPERATING SYSTEM.

5. ELECTRICAL EQUIPMENT SHALL HAVE AN APPROVED TESTING LABORATORY LABEL ATTACHED (UL, CSA ETC.) PER CEC 110.2.

6. PROVIDE LABELING AND DIRECTORIES FOR ALL SWITCHBOARDS AND PANELBOARDS PER CEC 408.4.

7. ELECTRICAL EQUIPMENT SHALL HAVE A SHORT CIRCUIT CURRENT RATING CAPABLE OF WITHSTANDING THE AVAILABLE SHORT CIRCUIT CURRENT PER CEC 110.9.

8. PROVIDE MINIMUM 30" WIDE x 78" HIGH x 36" DEEP [42" DEEP] WORK CLEARANCES IN FRONT OF PANELS, SERVICE OR EQUIPMENT RATED AT 120/208V 3Ø 4W [277/480V 3Ø 4W] PER CEC 110.26.

9. WIRING FOR 120/208V AND 277/480V SYSTEMS SHALL BE MIN. #12 AWG THHN/THWN-2 COPPER.

10. ALL CONDUCTORS ROUTED ON ROOFS EXPOSED TO SUNLIGHT SHALL BE XHHW-2.

11. FEEDERS SIZE #4 AND LARGER SHALL BE MEGGER TESTED. TEST RESULTS SHALL BE SUBMITTED TO THE ENGINEER.

12. ALL CONDUITS SHALL HAVE MINIMUM 36" COVER. INSTALL GALVANIZED RIGID STEEL RISERS & ELBOWS WHERE RISERS OCCUR. WRAP GRS BELOW GRADE OR PROVIDE PVC COATED GRS. EXPOSED CONDUIT SHALL BE GRS TO 8'-0", THEN EMT ABOVE AS APPROPRIATE. UNDER NO CIRCUMSTANCE SHALL PVC CONDUIT BE INSTALLED ABOVE GRADE.

13. CONDUIT INSTALLED ABOVE GRADE SHALL BE MIN. 3/4" TRADE SIZE. CONDUIT BELOW GRADE SHALL BE MIN. 1" TRADE SIZE.

14. ALL FLEXIBLE CONDUITS SHALL BE NO LONGER THAN 36" AND SHALL ONLY BE USED AT THE MOTOR END. SEE DETAILS 1/E-3, 2/E-3, 3/E-3 AND 4/E-3.

ELECT. EQUIPMENT ANCHORAGE NOTES:

ALL ELECTRICAL COMPONENTS SHALL BE ANCHORED AND INSTALLED PER THE DETAILS ON THE DSA APPROVED CONSTRUCTION DOCUMENTS. WHERE NO DETAIL IS INDICATED, THE FOLLOWING COMPONENTS SHALL BE ANCHORED OR BRACED TO MEET THE FORCE AND DISPLACEMENT REQUIREMENTS PRESCRIBED IN THE 2019 CBC, SECTIONS 1617A.1.18 THROUGH 1617A.1.26 AND ASCE 7-16, CHAPTERS 13, 26 AND 30:

1. ALL PERMANENT EQUIPMENT AND COMPONENTS.
2. TEMPORARY, MOVABLE OR MOBILE EQUIPMENT THAT IS PERMANENTLY ATTACHED (E.G. HARD WIRED) TO THE BUILDING ELECTRICAL UTILITY SERVICE. "PERMANENTLY ATTACHED" SHALL INCLUDE ALL ELECTRICAL CONNECTIONS EXCEPT PLUGS FOR 120/220 VOLT RECEPTACLES HAVING A FLEXIBLE CABLE.
3. TEMPORARY, MOVABLE OR MOBILE EQUIPMENT WHICH IS HEAVIER THAN 400 POUNDS OR HAS A CENTER OF MASS LOCATED 4 FEET OR MORE ABOVE THE ADJACENT FLOOR OR ROOF LEVEL THAT DIRECTLY SUPPORT THE COMPONENT IS REQUIRED TO BE RESTRAINED IN A MANNER APPROVED BY DSA.

THE FOLLOWING ELECTRICAL COMPONENTS SHALL BE POSITIVELY ATTACHED TO THE STRUCTURE BUT NEED NOT DEMONSTRATE DESIGN COMPLIANCE WITH THE REFERENCES NOTED ABOVE. THESE COMPONENTS SHALL HAVE FLEXIBLE CONNECTIONS PROVIDED BETWEEN THE COMPONENT AND ASSOCIATED CONDUIT. FLEXIBLE CONNECTIONS MUST ALLOW MOVEMENT IN BOTH TRANSVERSE AND LONGITUDINAL DIRECTIONS:

A. COMPONENTS WEIGHING LESS THAN 400 POUNDS AND HAVE A CENTER OF MASS LOCATED 4 FEET OR LESS ABOVE THE ADJACENT FLOOR OR ROOF LEVEL THAT DIRECTLY SUPPORT THE COMPONENT.
B. COMPONENTS WEIGHING LESS THAN 20 POUNDS, OR IN THE CASE OF DISTRIBUTED SYSTEMS, LESS THAN 5 POUNDS PER FOOT, WHICH ARE SUSPENDED FROM A ROOF OR FLOOR OR HUNG FROM A WALL.

THE ANCHORAGE OF ALL ELECTRICAL COMPONENTS SHALL BE SUBJECT TO THE APPROVAL OF THE DESIGN PROFESSIONAL IN GENERAL RESPONSIBLE CHARGE OR STRUCTURAL ENGINEER DELEGATED RESPONSIBILITY AND ACCEPTANCE BY DSA. THE PROJECT INSPECTOR WILL VERIFY THAT ALL COMPONENTS AND EQUIPMENT HAVE BEEN ANCHORED IN ACCORDANCE WITH THE ABOVE REQUIREMENTS.

ELECT. DISTRIBUTION SYSTEM BRACING NOTES:

THE ELECTRICAL DISTRIBUTION SYSTEM SHALL BE BRACED TO COMPLY WITH THE FORCES AND DISPLACEMENTS PRESCRIBED IN ASCE 7-16, SECTION 13.3 AS DEFINED IN ASCE 7-16, SECTIONS 13.6.5, 13.6.6, 13.6.7, 13.6.8, AND 2019 CBC, SECTIONS 1617A.1.24, 1617A.1.25, AND 1617A.1.26.

THE METHOD OF SHOWING BRACING AND ATTACHMENTS TO THE STRUCTURE FOR THE IDENTIFIED DISTRIBUTION SYSTEM SYSTEM ARE AS NOTED BELOW. WHEN BRACING AND ATTACHMENTS ARE BASED ON A PREAPPROVED INSTALLATION GUIDE (E.G., OSHPD OPM FOR 2013 CBC OR LATER), COPIES OF THE BRACING SYSTEM INSTALLATION GUIDE OR MANUAL SHALL BE AVAILABLE ON THE JOBSITE PRIOR TO THE START OF AND DURING THE HANGING AND BRACING OF THE DISTRIBUTION SYSTEMS. THE STRUCTURAL ENGINEER OF RECORD SHALL VERIFY THE ADEQUACY OF THE STRUCTURE TO SUPPORT THE HANGER AND BRACE LOADS.

THE ELECTRICAL DISTRIBUTION SYSTEM IS DETAILED ON THE APPROVED DRAWINGS WITH SPECIFIC NOTES AND DETAILS. WHEN A DETAIL IS NOT PROVIDED ON THE PLANS, THE ELECTRICAL DISTRIBUTION SYSTEM SHALL COMPLY WITH OSHPD PRE-APPROVAL #OPM-0052-13 (B-LINE).

ELECTRICAL SYMBOLS:

	WEATHERPROOF, G.F.I. PROTECTED DUPLEX RECEPTACLE, WALL MOUNTED +15" TO BOTTOM OF BOX, UNLESS OTHERWISE NOTED
	WEATHERPROOF, G.F.I. PROTECTED DUPLEX RECEPTACLE, WALL MOUNTED +15" TO BOTTOM OF BOX, UNLESS OTHERWISE NOTED
	JUNCTION BOX
	MOTOR CONNECTION AND FUSIBLE DISCONNECT SWITCH, FUSE AS REQUIRED, NEMA 3R FOR OUTDOOR
	VARIABLE FREQUENCY DRIVE
	FVNR MOTOR STARTER
	POWER DISTRIBUTION BOARD OR WIRE GUTTER AS NOTED
T	TRANSFORMER
	WIRES IN CONDUIT, CONCEALED IN OR UNDER FLOOR
	WIRES IN CONDUIT, CONCEALED IN WALL OR CEILING
A-2	HOMERUN OF CONDUIT AND WIRING, CIRCUIT NO. 2 TO PANEL 'A'
	CROSS HATCHES INDICATE NUMBER OF #12 AWG. CONDUCTORS IN CONDUIT, WHEN MORE THAN TWO. WIRE SIZE INDICATED ON PLANS WHEN OTHER #12 AWG. PROVIDE GROUND PER CEC 250. (LARGE HATCHES ARE NEUTRAL CONDUCTORS, SMALL HATCHES ARE HOT OR SWITCH-LEG CONDUCTORS, CURVED HATCHES ARE 0-10V PURPLE & GREY CONDUCTORS)
SURFACE / FLUSH	PANELBOARD
(E)	EXISTING
(N)	NEW
(R)	REPLACE
(D)	DEMOLISH
W.P.	WEATHERPROOF
U.O.N.	UNLESS OTHERWISE NOTED

Hardin-Davidson Engineering
356 Pollasky Ave., Suite 200
Clovis, CA 93612
559.323.4995 tel - 559.323.4928 fax

REGISTERED PROFESSIONAL ENGINEER R. J. HARDIN No. 9125 ELECTRICAL STATE OF CALIFORNIA

APPROVALS:

APPLICATION # ??????????

REGISTERED PROFESSIONAL ENGINEER MICHAEL D. CANTEMI M23588 REN. 9-30-2021 MECHANICAL STATE OF CALIFORNIA

DATE: 11-25-2020

EMS REPLACEMENT
EATON ELEMENTARY SCHOOL
1451 EAST SIERRA AVE. FRESNO, CA

FRESNO UNIFIED SCHOOL DISTRICT
4600 N. BRAWLEY AVE., FRESNO, CA.

REVISIONS

LAWRENCE ENGINEERING GROUP
7094 N. Maple Ave., Suite 101
Fresno, CA 93720
(559) 431-1001
FAX (559) 431-1302

TITLE:
ELECTRICAL
SYMBOLS & NOTES

SHEET: 1 OF 2

E-1

PROJECT 20138

17 March 2021 10:58 AM Z:\Clients\Lawrence Engineering Group\21030 - Eaton ES EMS\CAD Files\21030 - Electrical.dwg patrick.may

MOTOR REPLMZEMENT SCHEDULE

UNIT	MOTOR	OLD MOTOR SIZE (HP)	NEW MOTOR SIZE (HP)	WIRE REQUIRED
MZ-1	SUPPLY	5	7.5	3#14
MZ-1	EXHAUST	1.5	2	3#14
MZ-2	SUPPLY	7.5	10	3#12
MZ-2	EXHAUST	5	5	3#14
MZ-3	SUPPLY	7.5	15	3#10
MZ-3	EXHAUST	5	7.5	3#14
MZ-4	SUPPLY	7.5	10	3#12
MZ-4	EXHAUST	5	7.5	3#14

UNIT MCA REQUIREMENTS

UNIT	EXIST. MCA	NEW MCA	MOCP	FEEDER WIRE REQUIRED
MZ-1	79	82.8	100	1-1/4"C. - 3#3, 1#8 GRD.
MZ-2	83	86	100	1-1/4"C. - 3#2, 1#8 GRD.
MZ-3	83	96.4	100	1-1/4"C. - 3#2, 1#8 GRD.
MZ-4	83	89.4	100	1-1/4"C. - 3#2, 1#8 GRD.

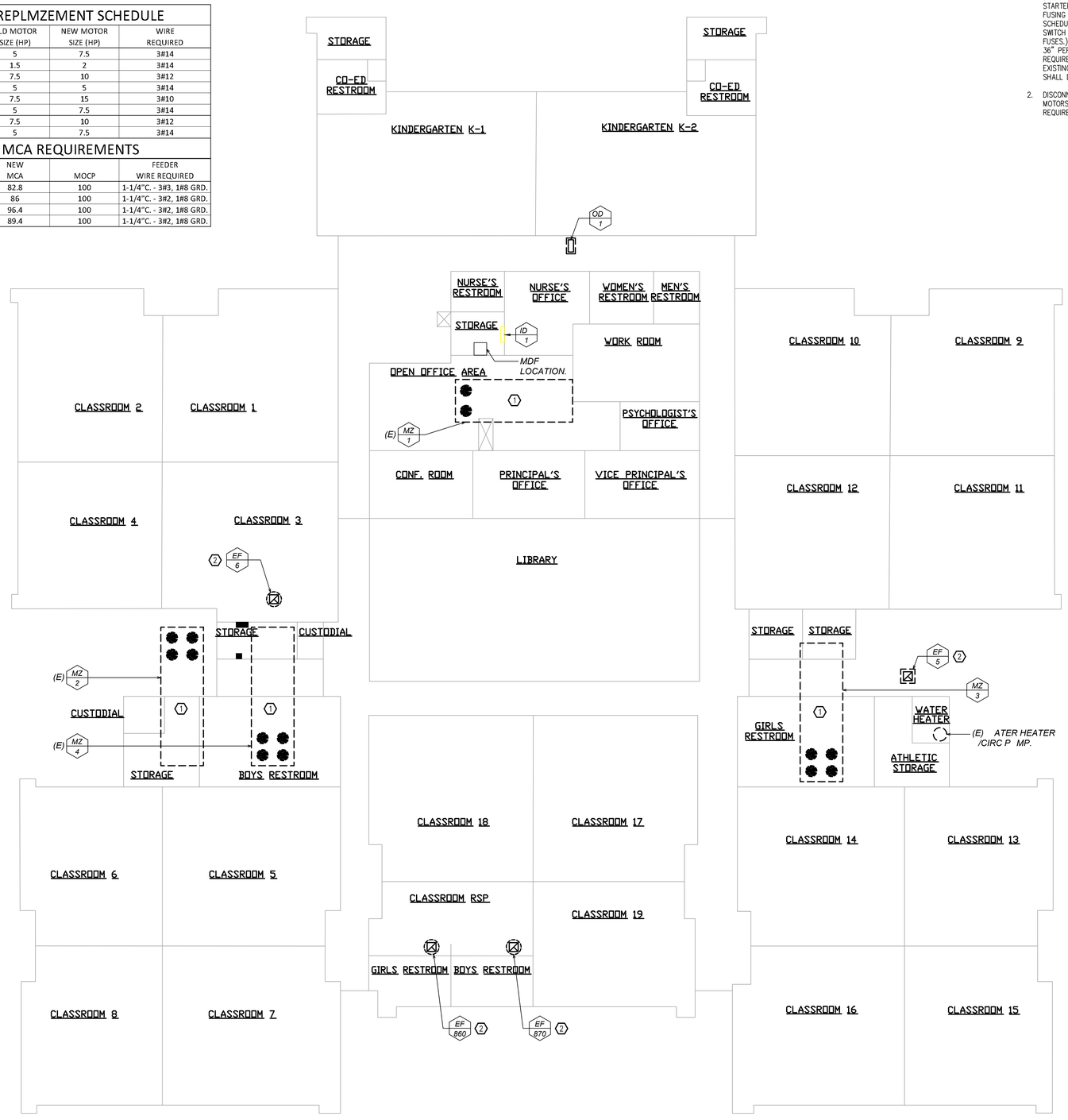

DRAWING KEY NOTES: (1)

1. DISCONNECT EXISTING FAN MOTORS AND STARTERS IN AC UNIT. REMOVE EXISTING FVNR MOTOR STARTER. INSTALL AND CONNECT NEW VFDS AS REQUIRED WITH ALL NEW WIRING AND PROVIDE FUSING AS REQUIRED BY VFD MANUFACTURER. CONNECT NEW MOTOR PER MOTOR REPLACEMENT SCHEDULE, THIS SHEET. PROVIDE NEW 100A, 480V, 3 POLE, NEMA 3R RATED FUSED DISCONNECT SWITCH WITH FUSES (DUAL ELEMENT, TIME DELAY. CONTRACTOR SHALL ALLOW FOR UP TO 100A FUSES.). REPLACE ANY EXISTING LIQUID-TITE FLEXIBLE CONDUIT WITH NEW (MAXIMUM LENGTH OF 36" PER DISTRICT STANDARD). PROVIDE NEW UPGRADED FEEDER WIRING PER UNIT MCA REQUIREMENT CHART, THIS SHEET. CONTRACTOR IS TO VISIT THE JOBSITE AND OBSERVE THE EXISTING CONDITIONS. IF THE EXISTING FEEDER RUNS ACROSS THE ROOF, THE CONTRACTOR SHALL DERATE THE FEEDER AS REQUIRED BY C.E.C. FOR ROOFTOP INSTALLATIONS.
2. DISCONNECT AND RECONNECT EXISTING EXHAUST FAN AS REQUIRED FOR INSTALLATION OF NEW MOTORS AND/OR CONTROLS. COORDINATE WITH MECHANICAL AND CONTROLS CONTRACTORS AS REQUIRED.

BLDG. A - CLASSROOM ADMIN. B ILDING

SCALE: 3/32"=1'-0"

Hardin-Davidson Engineering
356 Polasky Ave, Suite 200
Clovis, CA 93612
559.323.4995 tel - 559.323.4928 fax

REGISTERED PROFESSIONAL ENGINEER R. J. HARDIN No. 9125 ELECTRICAL STATE OF CALIFORNIA

APPROVALS:
APPLICATION # ??????????

REGISTERED PROFESSIONAL ENGINEER MICHAEL D. CANTEMI M23588 REN. 9-30-2021 MECHANICAL STATE OF CALIFORNIA

DATE: 11-25-2020

EMS REPLACEMENT
EATON ELEMENTARY SCHOOL
1451 EAST SIERRA AVE. FRESNO, CA

FRESNO UNIFIED SCHOOL DISTRICT
4600 N. BRAWLEY AVE. FRESNO, CA.

REVISIONS

LAWRENCE ENGINEERING GROUP
7084 N. Maple Ave., Suite 101
Fresno, CA 93720
(559) 431-1010
FAX (559) 431-1042

TITLE:
BLDG. A CLASSROOM
ELECTRICAL
PLAN

SHEET: 2 OF 2
E-2
PROJECT 20138

17 March 2021 10:58 AM Z:\Clients\Lawrence Engineering Group\21030 - Eaton ES EMS\CAD Files\21030 - Electrical.dwg patrick moy

FRESNO UNIFIED SCHOOL DISTRICT

ROWELL ELEMENTARY SCHOOL
EMS REPLACEMENT
3460 E. McKENZIE AVE.
FRESNO, CALIFORNIA 93702

OWNER
FRESNO UNIFIED SCHOOL DISTRICT

4600 N. BRAWLEY AVE.
FRESNO, CA 93722
(559) 457-3064

CONTACT: DANNY ANDERSON

MECHANICAL ENGINEER
LAWRENCE ENGINEERING GROUP

7084 NORTH MAPLE AVE. SUITE 101
FRESNO, CA 93720
(559) 431-0101

CONTACT: MICHAEL CANTELMI

ELECTRICAL ENGINEER

HARDIN-DAVIDSON ENGINEERING, INC.
356 POLLASKY AVE. SUITE 200
CLOVIS, CA 93612
(559) 323-4995

CONTACT: RICH HARDIN

GENERAL NOTES:

1. *ALL WORK SHALL CONFORM TO 2019 EDITION TITLE 24, CALIFORNIA CODE OF REGULATIONS (CCR).*
2. *CHANGE TO THE APPROVED DRAWINGS AND SPECIFICATIONS SHALL BE MADE BY ADDENDA OR CONSTRUCTION CHANGE DOCUMENT (CCD) APPROVED BY DSA, AS REQUIRED BY SECTION 4-338, PART 1, TITLE 24, CCR.*
3. *A "DSA CERTIFIED" PROJECT INSPECTOR EMPLOYED BY THE DISTRICT (OWNER) AND APPROVED BY DSA SHALL PROVIDE CONTINUOUS INSPECTION OF THE WORK. THE DUTIES OF THE INSPECTOR ARE DEFINED IN SECTION 4-342, PART 1, TITLE 24, CCR. PROJECT REQUIRES A CLASS 3 INSPECTOR.*
4. *A DSA ACCEPTED TESTING LABORATORY DIRECTLY EMPLOYED BY THE DISTRICT (OWNER) SHALL CONDUCT ALL THE REQUIRED TESTS AND INSPECTIONS FOR THE PROJECT.*
5. *THE INTENT OF THESE DRAWINGS AND SPECIFICATIONS IS THAT THE WORK OF THE ALTERATION, REHABILITATION OR RECONSTRUCTION IS TO BE IN ACCORDANCE WITH TITLE 24, CCR. SHOULD ANY EXISTING CONDITIONS SUCH AS DETERIORATION OR NON-COMPLYING CONSTRUCTION BE DISCOVERED WHICH IS NOT COVERED BY THE CONTRACT DOCUMENTS WHEREIN THE FINISHED WORK WILL NOT COMPLY WITH TITLE 24, CCR, A CONSTRUCTION CHANGE DOCUMENT (CCD), OR A SEPARATE SET OF PLANS AND SPECIFICATIONS, DETAILING AND SPECIFING THE REQUIRED WORK SHALL SUBMITTED TO AND APPROVED BY DSA BEFORE PROCEEDING WITH THE WORK. (SECTION 4-317(C), PART 1, TITLE 24, CCR)*

PROJECT NOTES:

1. *PROVIDE ALL NEW CONTROL WIRE.*
2. *PROVIDE ALL NEW ACTUATORS. RETURN EXISTING ACTUATORS TO DISTRICT.*
3. *PROVIDE A NEW OUTSIDE AIR TEMPERATURE SENSOR AT EACH MULTI-ZONE.*
4. *PROVIDE NEW CONTROLS FOR ALL EXHAUST FANS.*
5. *PROVIDE NEW CONTROLS FOR EXTERIOR LIGHTING. REFER TO FLOOR PLAN SHEETS. MOUNT HARDWARE IN NEW LOCKABLE ENCLOSURES.*
6. *PROGRAMMING SHALL BE IN THE CONTROLLERS AT THE UNIT, NOT THE FRONT END. THE FRONT END IS A MONITORING STATUS, ON-OFF DEVICE ONLY.*
7. *WIRING IN ATTICS SHALL BE SUPPORTED ON J-HOOKS. NO WIRING ON ROOF.*
8. *SALVAGE ALL CONTROL EQUIPMENT AND RETURN TO OWNER.*
9. *PROVIDE AND INSTALL A 20A/1P, DUPLEX RECEPTACLE WITH CIRCUIT AND CIRCUIT BREAKER FROM THE NEAREST 120 VOLT PANEL IS 80-FEET AWAY FIELD LOCATE. PROVIDE POWER CONNECTIONS TO EACH ENERGY MANAGEMENT RIB. REFER TO MECHANICAL/EMS PLANS FOR EQUIPMENT LOCATIONS.*

APPLICABLE CODES

2019 California Administrative Code - CCR Title 24, Part 1
2019 California Building Code - CCR Title 24, Part 2
2019 California Electrical Code - CCR Title 24, Part 3
2019 California Mechanical Code - CCR Title 24, Part 4
2019 California Plumbing Code - CCR Title 24, Part 5
2019 California Energy Code - CCR Title 24, Part 6
2019 California Fire Code - CCR Title 24, Part 9
2019 Existing Building Code - CCR Title 24, Part 10
2019 California Green Code - CCR Title 24 Part 11
2019 California Reference Code - CCR Title 24 Part 12
Title 19 CCR Public Saftey, State Fire Marshall Regulations
2019 NFPA 72 for Fire Alarm System.
CFC CH 33 Fire Saftey During Construction and Demolition

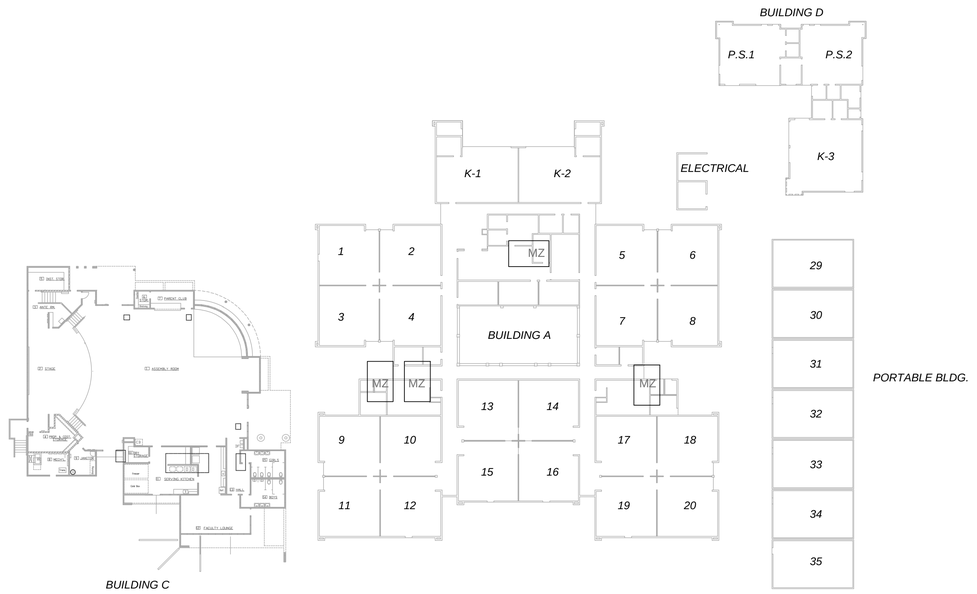

SITE PLAN
SCALE: 1" = 30'-0"

SHEET INDEX

MECHANICAL		SHEET COUNT
G1	COVER SHEET	1
M1	BUILDING A - EMS PLAN	2
M2	BUILDING C - EMS PLAN	3
M3	BUILDING D, E, & PORTABLES - EMS PLAN	4
M4	ENERGY MANAGEMENT DETAILS	5
M5	ENERGY MANAGEMENT DETAILS	6
M6	ENERGY MANAGEMENT DETAILS	7
M7	ENERGY MANAGEMENT DETAILS	8
M8	ENERGY MANAGEMENT DETAILS	9
M9	ENERGY MANAGEMENT DETAILS	10
M10	ENERGY MANAGEMENT DETAILS	11
ELECTRICAL		
E1	ELECTRICAL SYMBOLS AND NOTES	12
E2	ELECTRICAL PLAN	13
SHEET COUNT TOTAL:		**13**

SCOPE OF WORK

THE SCOPE OF WORK IS AS INDICATED BY THE CONTRACT DRAWINGS AND SPECIFICATION AND IS SUMMARIZED AS FOLLOWS:

- REPLACE EXISTING DDC CONTROLS w/(N) JOHNSON CONTROLS FX-80
- REPLACE AND UP SIZE EXISTING MULTI-ZONE UNIT SUPPLY AND RETURN / EXHAUST FAN WITH NEW MOTOR & VFD. SEE PLANS FOR SIZE & ELECTRICAL DRAWINGS.
- PROVIDE AN EXISTING CONDITION DUCT TRAVERSE FOR EACH SUPPLY ZONE, OUTSIDE AIR, & RETURN AIR ON MULTI-ZONE UNIT MZU-1, MZU-2, MZU-3 AND MZU-4 PRIOR TO START OF WORK AND ALSO UPON PROJECT COMPLETION.

APPROVALS:
APPLICATION # ??????????

REGISTERED PROFESSIONAL ENGINEER
MICHAEL D. CANTELMI
M23585
RENEWAL 9-30-2021
MECHANICAL
STATE OF CALIFORNIA

DATE: 11-25-2020

EMS REPLACEMENT
ROWELL ELEMENTARY SCHOOL
3460 EAST McKENZIE AVE. FRESNO, CA 93702

FRESNO UNIFIED SCHOOL DISTRICT
4600 N. BRAWLEY AVE. FRESNO, CA.

REVISIONS

LAWRENCE ENGINEERING GROUP
7084 N. Maple Ave., Suite 101
Fresno, CA 93720
(559) 431-0101
FAX (559) 431-1062

TITLE: COVER

SHEET: G1

PROJECT 20139

17 March 2021 7:52 AM P:\2020\20139 FUSD Rowell Elementary School\4-Drawings\4 M\G1 – BLDG. SITE PLAN.dwg ezequiel

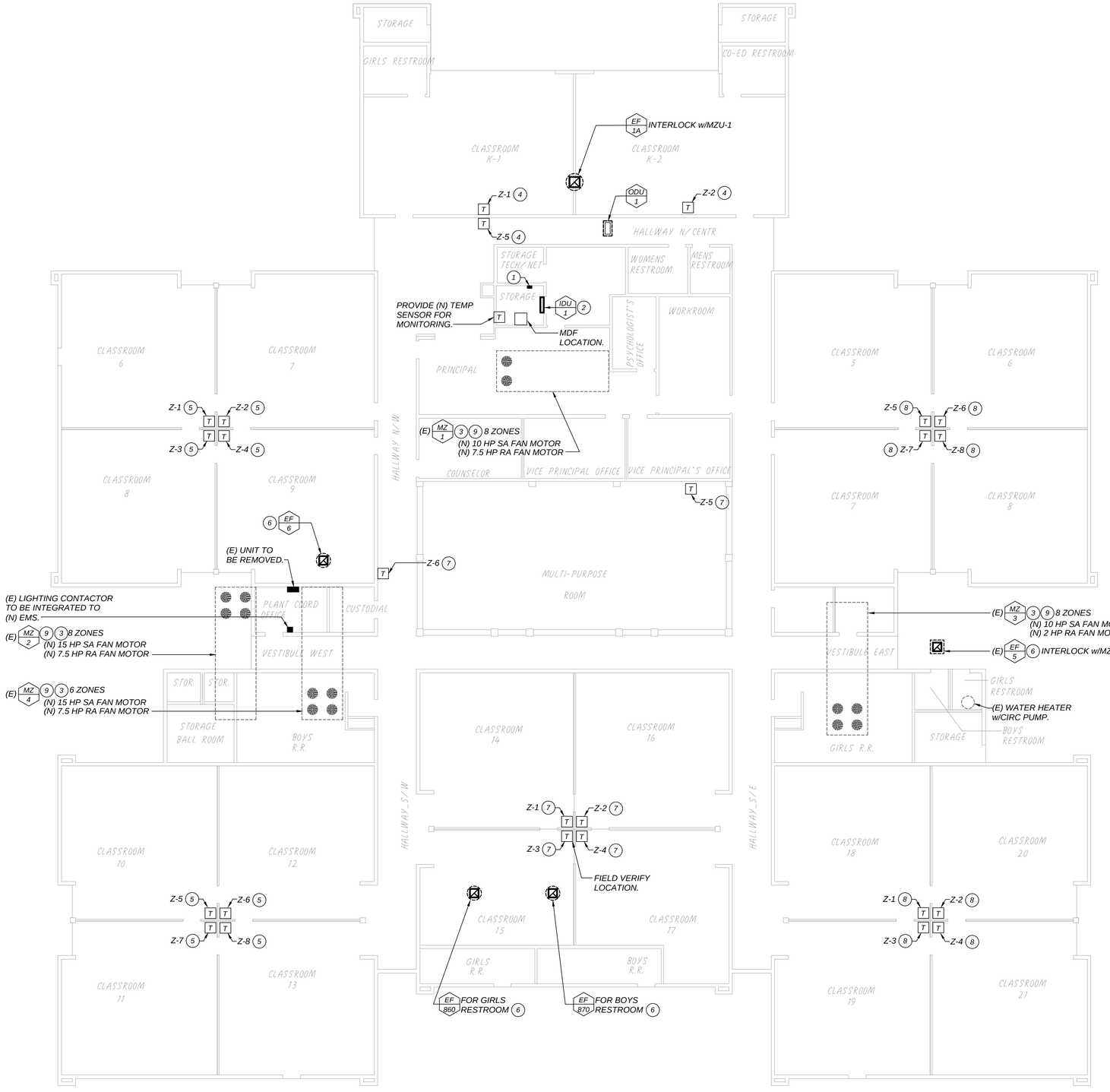

KEYNOTES: (THIS SHEET ONLY)

1. LOCATION OF (N) FX80.
2. (E) HIGH WALL MOUNTED SPLIT HEAT PUMP WITH ODU ON ROOF.
3. (E) MULTI-ZONE AIR HANDLER ON ROOF.
4. MZ 1 ZONE
5. MZ 2 ZONE
6. EXHAUST FAN ON ROOF.
7. MZ 4 ZONE
8. MZ 3 ZONE
9. REMOVE AND REPLACE (E) FAN MOTOR & ACCESSORIES w/(N) ALLEN BRADLEY VFD & COMPATIBLE MOTOR. PRE & POST AIR FLOW MEASUREMENTS TO MATCH. PROVIDE REPORTS TO MEOR.

BUILDING A - EMS PLAN

SCALE: 3/32" = 1'-0"

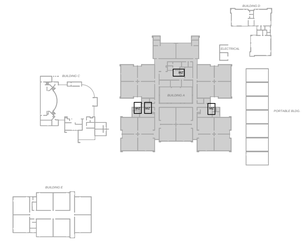

KEYPLAN

SCALE: NONE

APPROVALS:

APPLICATION # ??????????

REGISTERED PROFESSIONAL ENGINEER MICHAEL D. CURTIS M23685 REN. 9-30-2021 MECHANICAL STATE OF CALIFORNIA

DATE: 11-25-2020

EMS REPLACEMENT
ROWELL ELEMENTARY SCHOOL
3460 EAST McKENZIE AVE. FRESNO, CA 93702

FRESNO UNIFIED SCHOOL DISTRICT
4600 N. BRAWLEY AVE. FRESNO, CA.

REVISIONS

LAWRENCE ENGINEERING GROUP
7084 N. Maple Ave., Suite 101
Fresno, CA 93720
(559) 431-1001
FAX (559) 431-1082

TITLE: BUILDING A EMS PLAN

SHEET: M1

PROJECT 20139

17 March 2021 7:52 AM P:\2020\20139 FUSD Rowell Elementary School\4-Drawings\4 M\M1 - BLDG. A LIBRARY MEDIA CLASSROOMS .dwg ezequiel

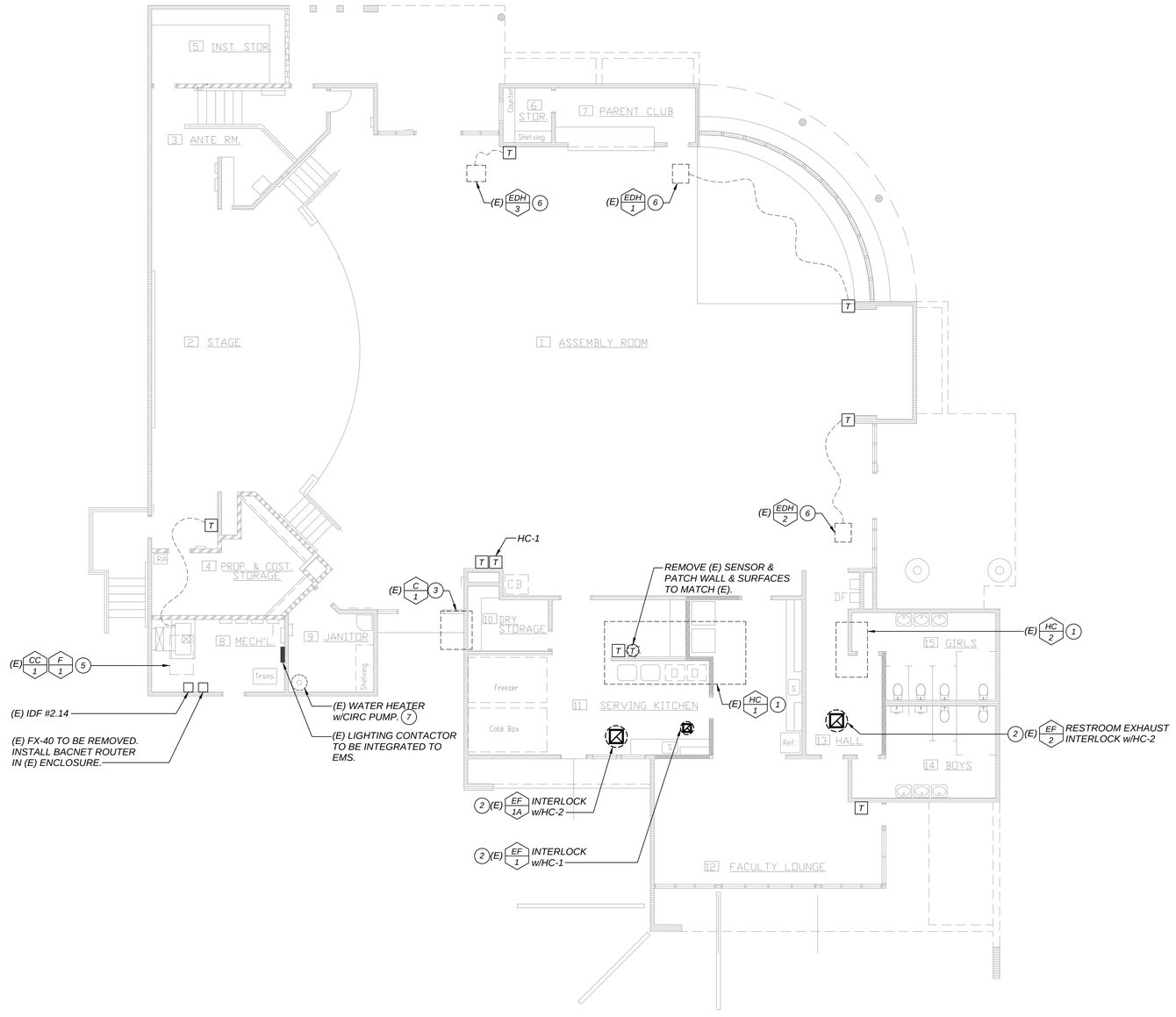

KEYNOTES: (THIS SHEET ONLY)

1. (E) PACKAGE AIR UNIT ON ROOF.
2. (E) EXHAUST FAN ON ROOF.
3. (E) AIR COOLED CONDENSER ON ROOF.
4. (E) CIRCULATION PUMP TO BE INTEGRATED TO EMS THROUGH NEAREST CONTROLLER.
5. (E) DX COOLING COIL w/ C 1 ON ROOF, & (E) FURNACE.
6. (E) ELECTRIC DUCT HEATER TO BE ENABLED ONLY WHEN UNIT IS FUNCTIONING.
7. REFER TO DETAIL D/M9.

BUILDING. C - MULTI-PURPOSE ROOM

SCALE: 1/8" = 1'-0"

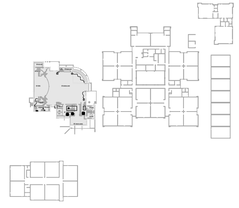

KEYPLAN

SCALE: NONE

APPROVALS:

APPLICATION # ??????????

REGISTERED PROFESSIONAL ENGINEER — MICHAEL D. CURTIS — M23688 — RENEWAL 9-30-2021 — MECHANICAL — STATE OF CALIFORNIA

DATE: 11-25-2020

EMS REPLACEMENT
ROWELL ELEMENTARY SCHOOL
3460 EAST McKENZIE AVE. FRESNO, CA 93702

FRESNO UNIFIED SCHOOL DISTRICT
4600 N. BRAWLEY AVE. FRESNO, CA.

REVISIONS

LAWRENCE ENGINEERING GROUP
7084 N. Maple Ave., Suite 101
Fresno, CA 93720
(559) 432-1011
FAX (559) 431-1302

TITLE:
LIBRARY
MEDIA
CLASSROOMS

SHEET: M2

PROJECT 20139

17 March 2021 7:52 AM P:\2020\20139 FUSD Rowell Elementary School\4-Drawings\4 M\M2 – BLDG. C MULTI-PURPOSE ROOM.dwg ezequiel

APPROVALS:

APPLICATION #
?????????

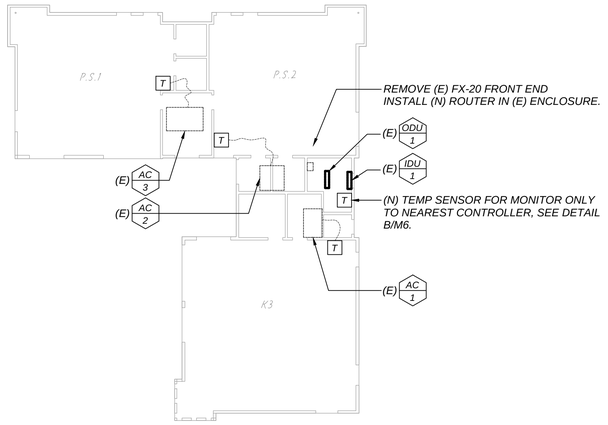

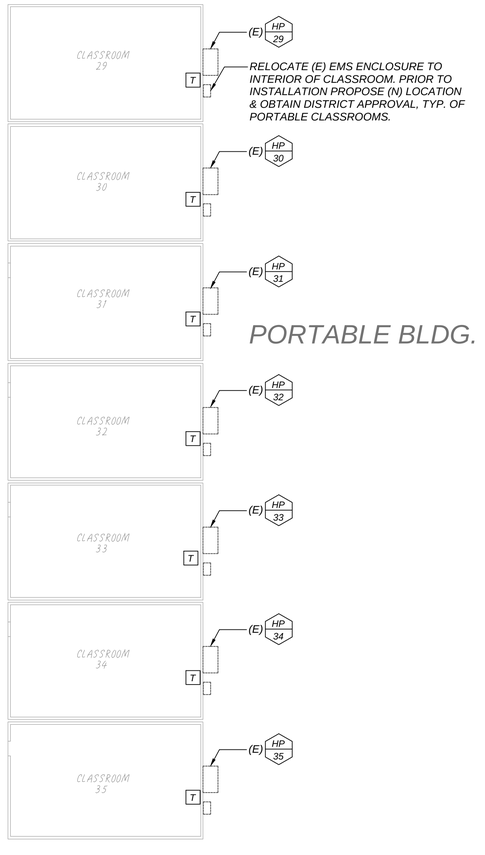

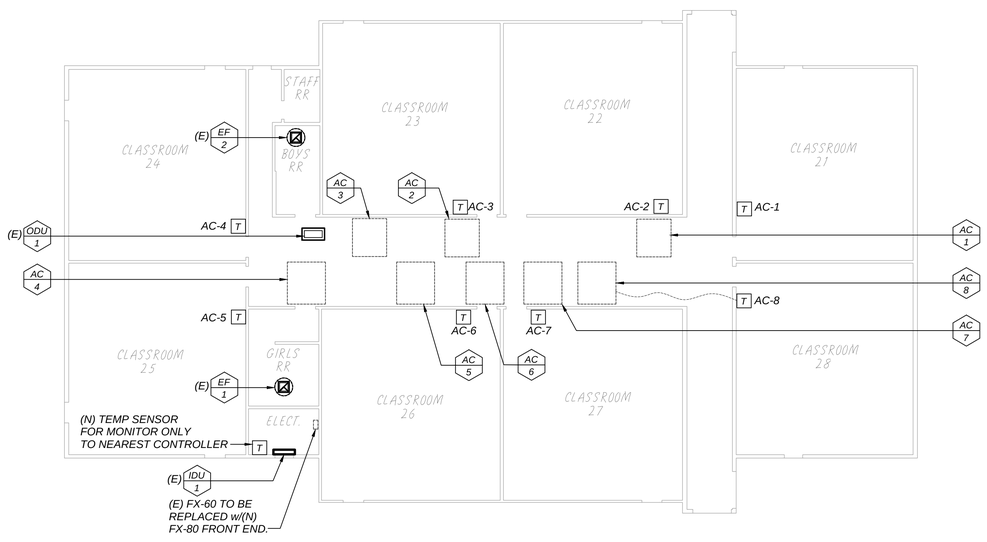

BUILDING E - EMS PLAN

A
M3

SCALE: 1"=10'-0"

BUILDING D AND PORTABLES - EMS PLAN

B
M3

SCALE: 1"=40'-0"

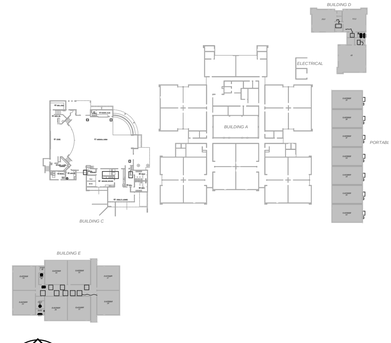

KEYPLAN

SCALE: 1" = 200'-0"

DATE: 11-25-2020

EMS REPLACEMENT
ROWELL ELEMENTARY SCHOOL
3460 EAST McKENZIE AVE. FRESNO, CA 93702

FRESNO UNIFIED SCHOOL DISTRICT
4600 N. BRAWLEY AVE. FRESNO, CA.

REVISIONS

LAWRENCE
ENGINEERING GROUP
7084 N. Maple Ave., Suite 101
Fresno, CA 93720
(559) 431-0101
FAX (559) 431-1362

TITLE:
BUILDINGS
"D" AND "E"
EMS PLAN

SHEET:
M3

PROJECT 20139

17 March 2021 7:52 AM P:\2020\20139 FUSD Rowell Elementary School\4-Drawings\4 M\M3 - BLDG. D & E & PORTABLE ROOMS.dwg ezequiel

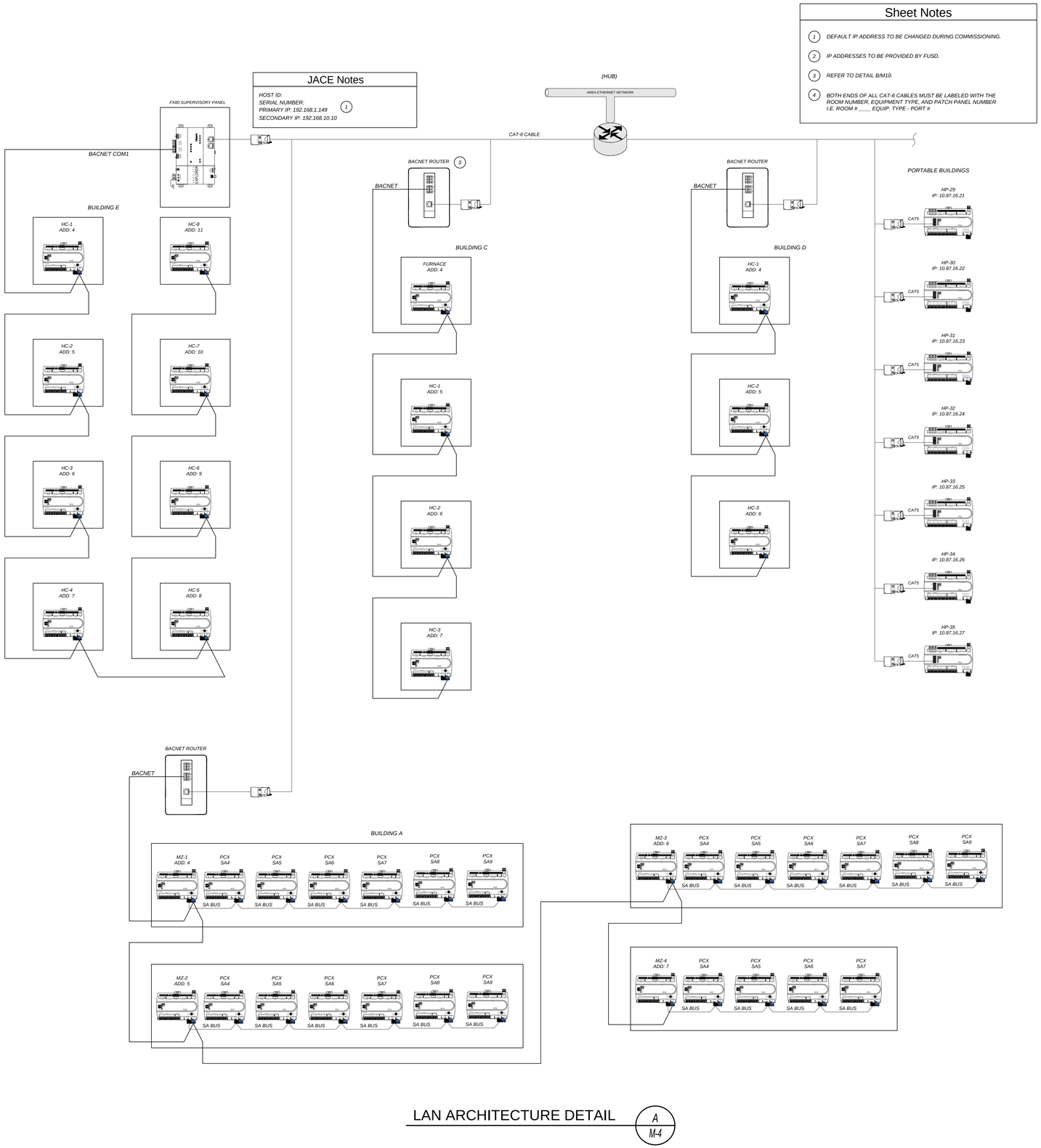

Sheet Notes

1. DEFAULT IP ADDRESS TO BE CHANGED DURING COMMISSIONING.
2. IP ADDRESSES TO BE PROVIDED BY FUSD.
3. REFER TO DETAIL B/M10.
4. BOTH ENDS OF ALL CAT-6 CABLES MUST BE LABELED WITH THE ROOM NUMBER, EQUIPMENT TYPE, AND PATCH PANEL NUMBER I.E. ROOM # ____ EQUIP. TYPE - PORT #

ROWELL ELEMENTARY SCHOOL CONTROL REFERENCES

Room Name	Room No.	A/C Mark No.	System Type	Description or Notes	See Detail
BUILDING A - CLASSROOM & ADMIN					
See Plans		MZ-1	MZ AH	8 zones, (N) 7.5 HP SA & 2HP EXH. Fan Motor and VFD	C/M-5
See Plans		MZ-2	MZ AH	8 zones, (N) 10 HP SA & 5 HP RA Fan Motor and VFD	C/M-5
See Plans		MZ-3	MZ AH	8 zones, (N) 10 HP SA & 7.5 HP RA Fan Motor and VFD	C/M-5
See Plans		MZ-4	MZ AH	8 zones, (N) 15 HP SA & 7.5 HP RA Fan Motor and VFD	C/M-5
		EF-6	R/R Exhaust Fan	Interlock with lights	C/M-9
Storage			Lighting Contactor	Intergrate into (N) EMS	B/M-5
		EF-5	R/R Exhaust Fan		
Water Heater			WH w/ Circ. Pump	Intergrate Pump ON/OFF to nearest UO	D/M-9
		EF-860	R/R Exhaust Fan	Interlock with lights	C/M-9
		EF-870	R/R Exhaust Fan	Interlock with lights	C/M-9
Storage		IDU-1/ODU-1	Split HP	Intergrate to Nearest UI, Monitor Only	B/M-6
BUILDING C					
Assembly Room	1	HC-1	G/E	Unit has 3 Electric Duct Heaters, Economizer and Powered Exhuast	A/M-8
Stage	2	F-1/CC-1/ C-1	Split G/E	Gas Furance w/ DX Cooling Coil, and Air Cooled Condenser	A/M-7
Mech'l	8			Intergrate Lighting Contactor to Nearest UI	F/M-9
Janitor	9		WH w/ Circ Pump	Intergrate Pump ON/OFF to nearest UO	D/M-9
		EF-1	Exhaust Fan	INTERLOCK w/ HC-2	E/M9
Serving Kitchen	11	EF-1A	Exhaust Fan	Interlock with HC-2	E/M-9
Faculty Lounge	12	HC-2	G/E	Rooftop Packaged Unit	C/M-7
Faculty Lounge	12	EF-2	Exhaust Fan	Interlock with HC-2	E/M-9
BUILDING D					
Classroom	K3	AC-1	G/E	Rooftop Packaged Unit	C/M-7
Classroom	P.S.1	AC-2	G/E	Rooftop Packaged Unit	C/M-7
Classroom	P.S.2	AC-3	G/E	Rooftop Packaged Unit	C/M-7
Electrical Room		IDU-1/ODU-1	Split HP	Intergrate to Nearest UI, Monitor Only	B/M-6
BUILDING E					
Classroom	21	AC-1	G/E	Rooftop Packaged Unit	C/M-7
Classroom	22	AC-2	G/E	Rooftop Packaged Unit	C/M-7
Classroom	23	AC-3	G/E	Rooftop Packaged Unit	C/M-7
Classroom	24	AC-4	G/E	Rooftop Packaged Unit	C/M-7
Classroom	25	AC-5	G/E	Rooftop Packaged Unit	C/M-7
Classroom	26	AC-6	G/E	Rooftop Packaged Unit	C/M-7
Classroom	27	AC-7	G/E	Rooftop Packaged Unit	C/M-7
Classroom	28	AC-8	G/E	Rooftop Packaged Unit	C/M-7
Electrical	-	IDU-1/ODU-1	Split HP	Intergrate to Nearest UI, Monitor Only	B/M-6
Boys RR	-	EF-2	R/R Exhaust Fan	Interlock with lights	C/M-9
Girls RR	-	EF-1	R/R Exhaust Fan	Interlock with lights	C/M-9
PORTABLES					
CLASSROOM	29	HP-29	Wall Mounted HP		C/M-8
CLASSROOM	30	HP-30	Wall Mounted HP		A/M-9
CLASSROOM	31	HP-31	Wall Mounted HP		A/M-9
CLASSROOM	32	HP-32	Wall Mounted HP		C/M-8
CLASSROOM	33	HP-33	Wall Mounted HP		A/M-9
CLASSROOM	34	HP-34	Wall Mounted HP		A/M-9
CLASSROOM	35	HP-35	Wall Mounted HP		A/M-9
SITE					
Exterior Lighting					F/M-9

NOTES:
1. System Type Abbreviations: G/E - Gas Heating/Electric Cooling; HP - Heat Pump
   CP - Central Plant Hot or Chilled Water
   LS - Light Switch
   UV - Unit Ventilator
   MUA- Make-up Air
   HW- Hot Water
   DHW- Domestic Hot Water
   MZ - Multizone
   AH - Air handler
   WH- Domestic Water Heater
   Fur - Furnance

LAN ARCHITECTURE DETAIL A/M-4

APPROVALS:
APPLICATION # ??????????

REGISTERED PROFESSIONAL ENGINEER MICHAEL D. CROSBY M23585 RENEWAL 9-30-2021 MECHANICAL STATE OF CALIFORNIA

DATE: 11-25-2020

EMS REPLACEMENT
ROWELL ELEMENTARY SCHOOL
3460 EAST McKENZIE AVE. FRESNO, CA 93702

FRESNO UNIFIED SCHOOL DISTRICT
4600 N. BRAWLEY AVE. FRESNO, CA.

REVISIONS

LAWRENCE ENGINEERING GROUP
7984 N. Maple Ave., Suite 101
Fresno, CA 93720
(559) 431-1010
FAX (559) 431-1302

TITLE:

SHEET: M4

PROJECT 20139

17 March 2021 7:52 AM P:\2020\20139 FUSD Rowell Elementary School\4-Drawings\4 M\M4 – CONTROLS.dwg ezequel

NOTE: ALL WIRES INSIDE OF PANEL TO BE LABELED AS SHOWN WITH HEAT SHRINK MARKERS ON TERMINATING ENDS OF WIRE.

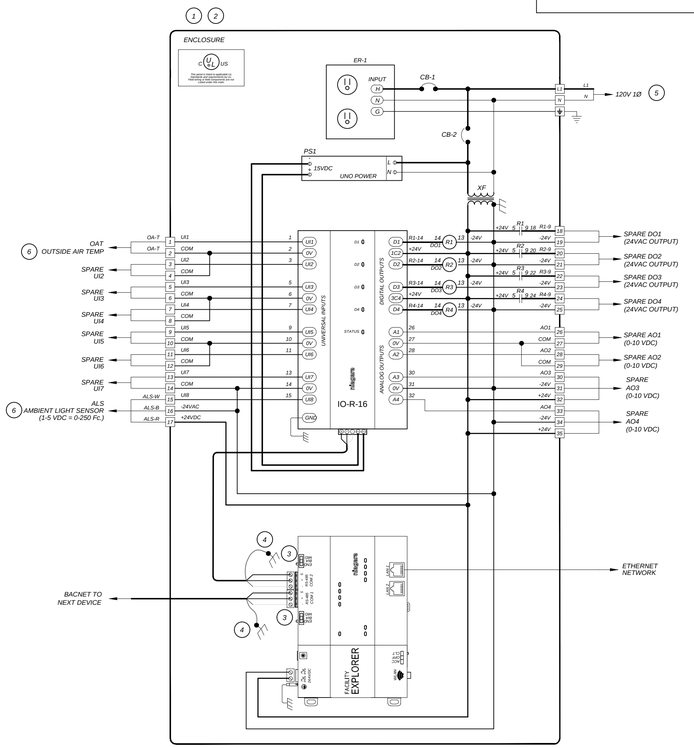

Panel Components

TAG	DESCRIPTION
FX	FX-80 CONTROLLER AND SD CARD
	FX-80 SMA
	FX-80 DEVICE LICENCE
RIO16	16 POINT REMOTE INPUT/OUTPUT EXPANSION
XF	120 - 24V TRANSFORMER
CB-1	MANUAL RESET 15.0 AMP CIRCUIT BREAKER
CB-2	MANUAL RESET 2.0 AMP CIRCUIT BREAKER
ENC	NEMA-12
ENC	PANEL BACKPLATE
ENC	PADLOCK KIT
ER-1	ELECTRICAL OUTLET
R1-R4	2-POLE 24VAC RELAY W/LED
R1-R4	2-POLE RELAY BASE
PS-1	15VDC POWER SUPPLY

Detail Notes

1. CONTROL PANEL FABRICATED BY TOTAL CONTROL CONTACT DEVEN PUTNAM AT 559-291-1000
2. PANEL SHALL BE UL LISTED
3. JACE SELECTOR SWITCH NEED TO BE SET TO THE "END" POSITION
4. RS-485 COMM BUS SHIELD TO BE GROUNDED AT THE SCP PANEL ONLY
5. LINE VOLTAGE & CONDUIT BY DIVISION 16
6. SEE DETAIL B/M5.

SUPERVISORY SCP SCHEMATIC DETAIL — A / M-5

Control Components

TAG	DESCRIPTION
CDAT,HDAT	DUCT TEMP SENSOR
OAT	OUTSIDE AIR SENSOR
MAT	AVERAGING DUCT TEMP SENSOR
OAD/RAD	SPRING RETURN DAMPER ACTUATOR
PFDP	PRESSURE TRANSDUCER
SFVFD	(N) VARIABLE FREQUENCY DRIVE

Detail Notes

1. LINE VOLTAGE & CONDUIT BY DIVISION 16.
2. CONTROL COMPONENTS PROVIDED BY TOTAL CONTROL CONTACT DEVEN PUTNAM AT 559-291-1000.
3. REFER TO DETAIL D/M5 FOR ZONE CONTROL DETAIL.
4. PROVIDE (N) ACTUATOR, FIELD VERIFY QUANITY.
5. (N) VARIBLE FREQUENCY DRIVE.

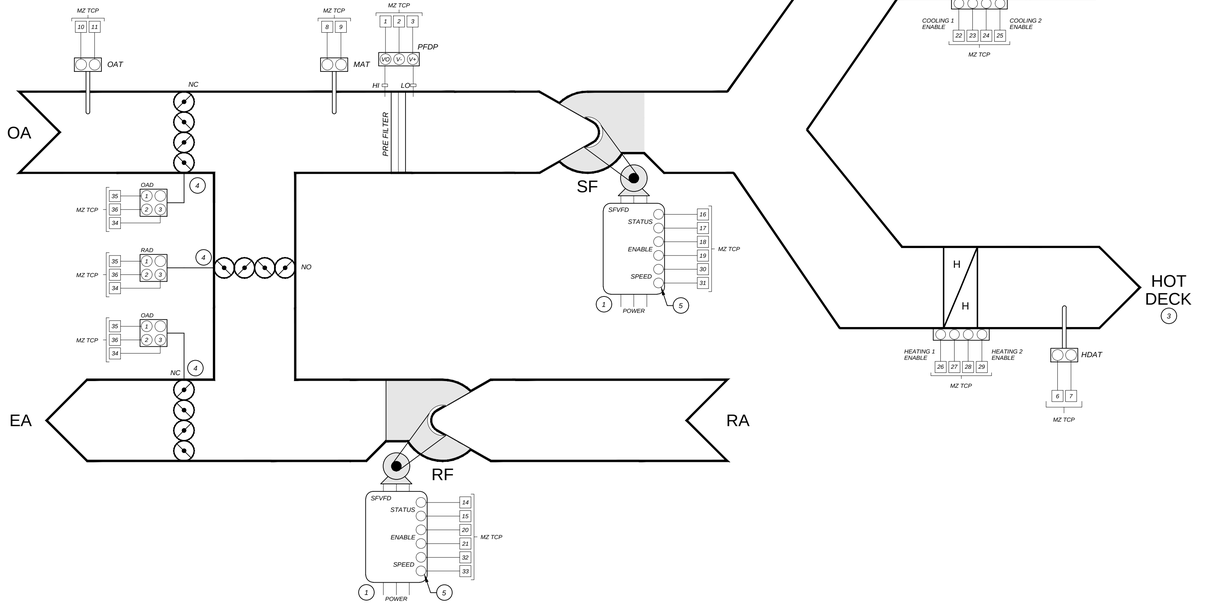

MULTI-ZONE CONTROL DETAIL — C / M-5

Control Components

TAG	DESCRIPTION
ALS	AMBIENT LIGHT SENSOR
OAT	10K TYPE 3 OUTDOOR SENSOR

Detail Notes

1. LOCATE AMBIENT LIGHT SENSOR AT NORTHERN EXPOSURE OF BUILDING.
2. SEE DETAIL A/M-5

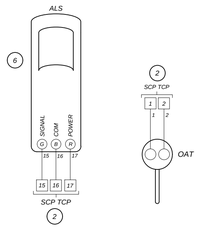

OUTDOOR PHOTOCELL AND TEMP SENSOR DETAIL — B / M-5

Control Components

TAG	DESCRIPTION
NZS	ZONE SENSOR W/ SETPOINT ADJUSTMENT
DAT	-
ZNDA	-

Detail Notes

1. LINE VOLTAGE & CONDUIT BY DIVISION 16.
2. CONTROL COMPONENTS PROVIDED BY TOTAL CONTROL CONTACT DEVEN PUTNAM AT 559-291-1000.
3. PROVIDE (N) ACTUATOR.

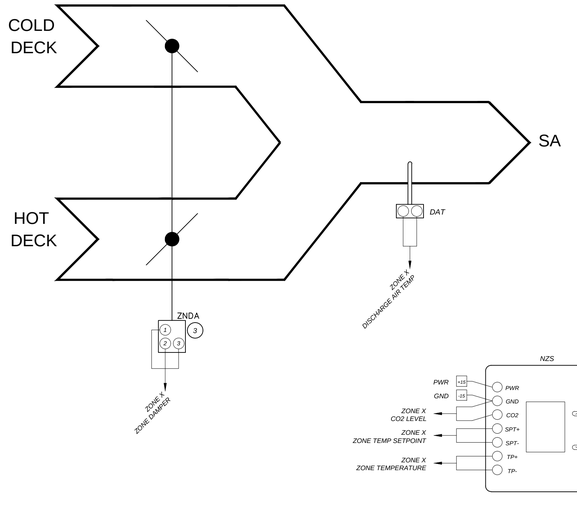

ZONE CONTROL DETAIL — D / M-5

APPROVALS:

APPLICATION # ??????????

REGISTERED PROFESSIONAL ENGINEER — MICHAEL D. CROSBY — M23688 — REN. 9-30-2021 — MECHANICAL — STATE OF CALIFORNIA

DATE: 11-25-2020

EMS REPLACEMENT
ROWELL ELEMENTARY SCHOOL
3460 EAST McKENZIE AVE. FRESNO, CA 93702

FRESNO UNIFIED SCHOOL DISTRICT
4600 N. BRAWLEY AVE. FRESNO, CA.

REVISIONS

LAWRENCE ENGINEERING GROUP
7084 N. Maple Ave., Suite 101
(559) 431-0101
Fresno, CA 93720
FAX (559) 431-3562

TITLE: ENERGY MANAGEMENT DETAILS

SHEET: M5

PROJECT 20139

17 March 2021 7:52 AM P:\2020\20139 FUSD Rowell Elementary School\4-Drawings\4 M\M5 – CONTROLS.dwg ezequiel

NOTE: ALL WIRES INSIDE OF PANEL TO BE LABELED AS SHOWN WITH HEAT SHRINK MARKERS ON TERMINATING ENDS OF WIRE.

Sheet Notes

1. CONTROL PANELS FABRICATED BY TOTAL CONTROL CONTACT DEVEN PUTNAM AT 559-291-1000
2. PANEL SHALL BE UL LISTED
3. LINE VOLTAGE AND CONDUIT BY DIVISION 16.

Panel Components

TAG	DESCRIPTION
PCG	GENERAL PROGRAMMABLE CONTROLLER
ENC	NEMA-4 ENCLOSURE
ENC	SOLID PANEL BACKPLATE
ENC	PANEL LOCK KIT
CB-1	2.0 AMP CIRCUIT BREAKER
XF	96VA 24VAC TRANSFORMER
R1-R6	2-POLE 24VAC RELAY W/ LED
R1-R6	2-POLE RELAY BASE
PCX	I/O EXPANSION MODULE
PS-1	15VDC POWER SUPPLY

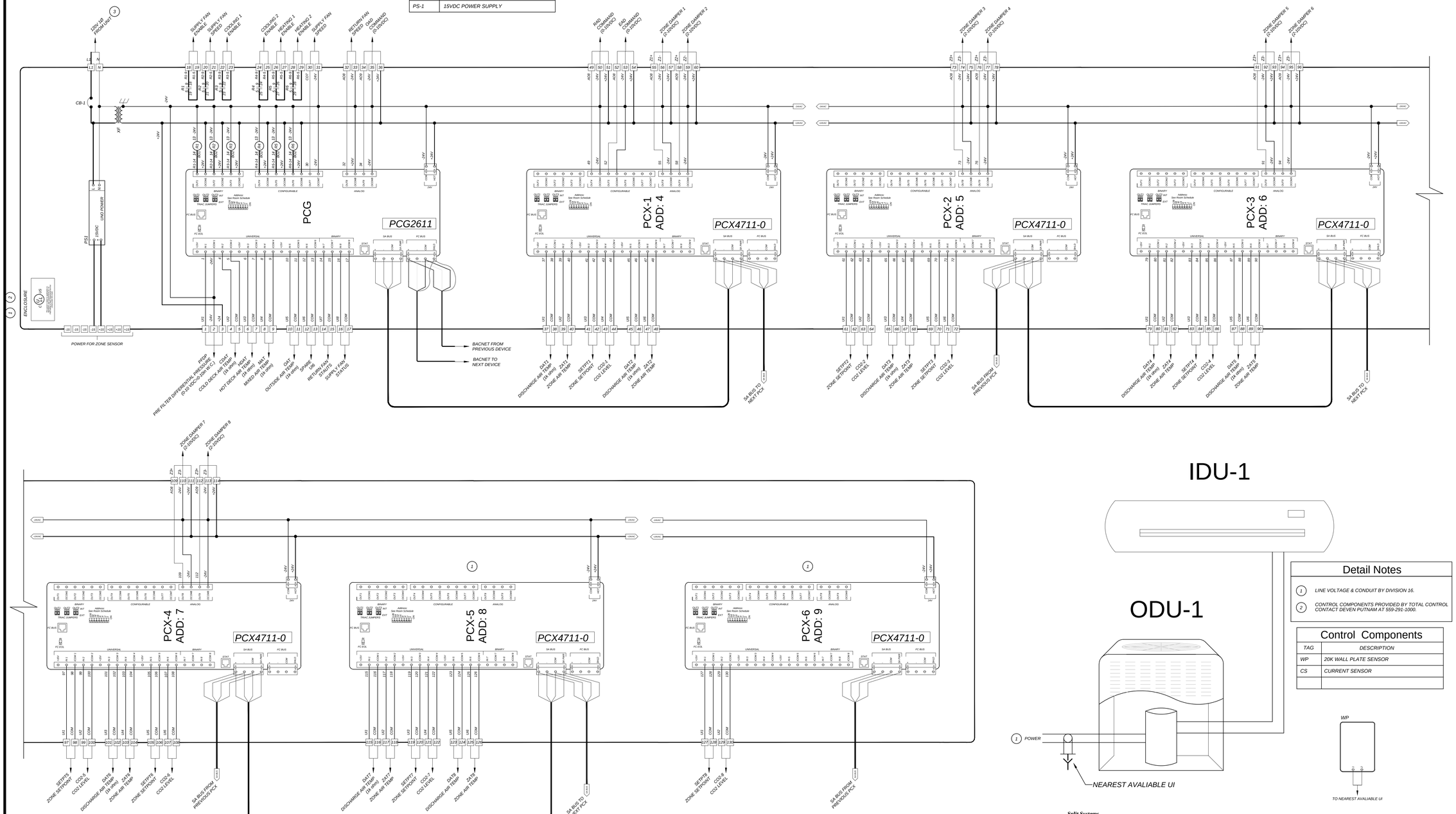

MULTI-ZONE SCHEMATIC DETAIL P1

A
M-6

Detail Notes

1. LINE VOLTAGE & CONDUIT BY DIVISION 16.
2. CONTROL COMPONENTS PROVIDED BY TOTAL CONTROL CONTACT DEVEN PUTNAM AT 559-291-1000.

Control Components

TAG	DESCRIPTION
WP	20K WALL PLATE SENSOR
CS	CURRENT SENSOR

Split Systems

Unit will be controlled by factory controller, BAS for temp monitoring only with alarms at district set thresholds. Unit will run 24/7.

ODU/IDU CONTROL DETAIL

B
M-6

APPROVALS:

APPLICATION # ?????????

REGISTERED PROFESSIONAL ENGINEER
MICHAEL D. CAMPBELL
M23588
REN. 9-30-2021
MECHANICAL
STATE OF CALIFORNIA

DATE: 11-25-2020

EMS REPLACEMENT
ROWELL ELEMENTARY SCHOOL
3460 EAST McKENZIE AVE. FRESNO, CA 93702

FRESNO UNIFIED SCHOOL DISTRICT
4600 N. BRAWLEY AVE. FRESNO, CA.

REVISIONS

LAWRENCE ENGINEERING GROUP
7084 N. Maple Ave., Suite 101
(559) 431-0101
Fresno, CA 93720
FAX (559) 431-1362

TITLE:
ENERGY MANAGEMENT DETAILS

SHEET:
M6

PROJECT 20139

17 March 2021 7:53 AM P:\2020\20139 FUSD Rowell Elementary School\4-Drawings\4 M\M6 - CONTROLS.dwg ezequiel

Control Components	
TAG	DESCRIPTION
DAT	DUCT TEMP SENSOR
SFCS/CUCS	CURRENT SENSOR
RIB	24VAC RELAY IN A BOX
NZS	NETWORK ZONE SESNOR W/ CO_2

Detail Notes	
1	LINE VOLTAGE & CONDUIT BY DIVISION 16.
2	UNIT SHALL SHUT DOWN UPON DETECTION OF SMOKE. WIRE ACCORDINGLY.
3	CONTROL COMPONENTS PROVIDED BY TOTAL CONTROL CONTACT DEVEN PUTNAM AT 559-291-1000.
4	SEE DETAIL B/M-7 FOR TCP DIAGRAM.

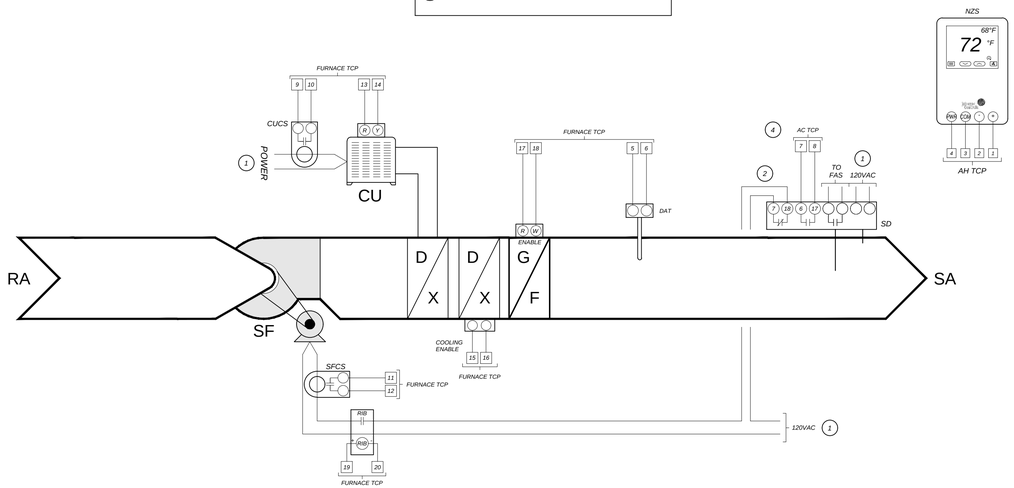

FURNACE C1/F-1 CONTROL DETAIL

A / M-7

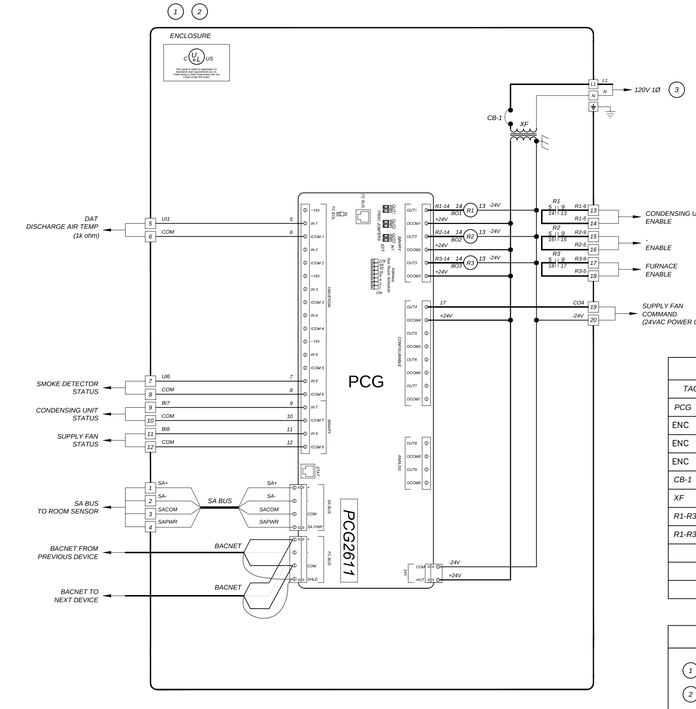

Panel Components	
TAG	DESCRIPTION
PCG	GENERAL PROGRAMMABLE CONTROLLER
ENC	NEMA 4 ENCLOSURE
ENC	BACKPLATE ENCLOSURE
ENC	PANEL LOCK KIT
CB-1	2.0 AMP CIRCUIT BREAKER
XF	96VA 24VAC TRANSFORMER
R1-R3	2-POLE 24VAC RELAY W/ LED
R1-R3	2-POLE RELAY BASE

Detail Notes	
1	CONTROL PANELS FABRICATED BY TOTAL CONTROL CONTACT DEVEN PUTNAM AT 559-291-1000
2	PANEL SHALL BE UL LISTED
3	LINE VOLTAGE AND CONDUIT BY DIVISION 16.

FURNACE TCP SCHEMATIC DETAIL

B / M-7

Control Components	
TAG	DESCRIPTION
DAT	DUCT TEMP SENSOR
CCS,SFCS	CURRENT SENSOR
NZS	NETWORK ZONE SENSOR W/ CO_2
OAD/RAD	SPRING RETURN DAMPER ACTUATOR

Detail Notes	
1	LINE VOLTAGE & CONDUIT BY DIVISION 16.
2	OAT GLOBALLY SHARED SOFTWARE POINT
3	CONTROL COMPONENTS PROVIDED BY TOTAL CONTROL CONTACT DEVEN PUTNAM AT 559-291-1000.
4	SEE DETAIL D/M-7 FOR TCP DIAGRAM.

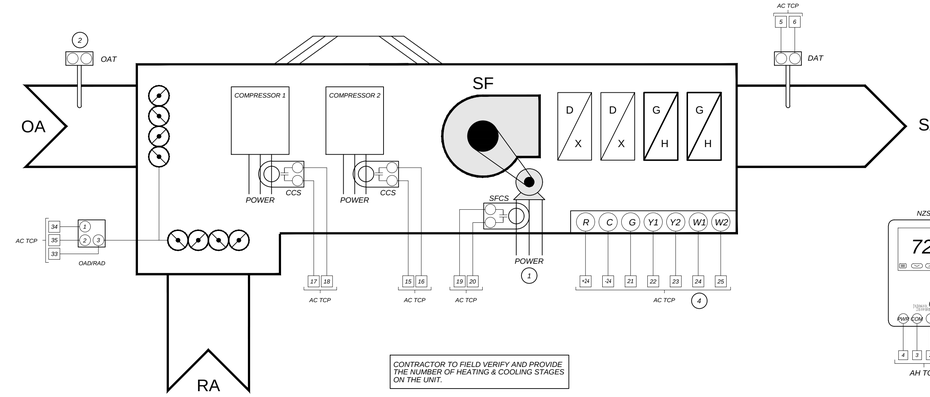

ROOF TOP UNIT CONTROL DETAIL

C / M-7

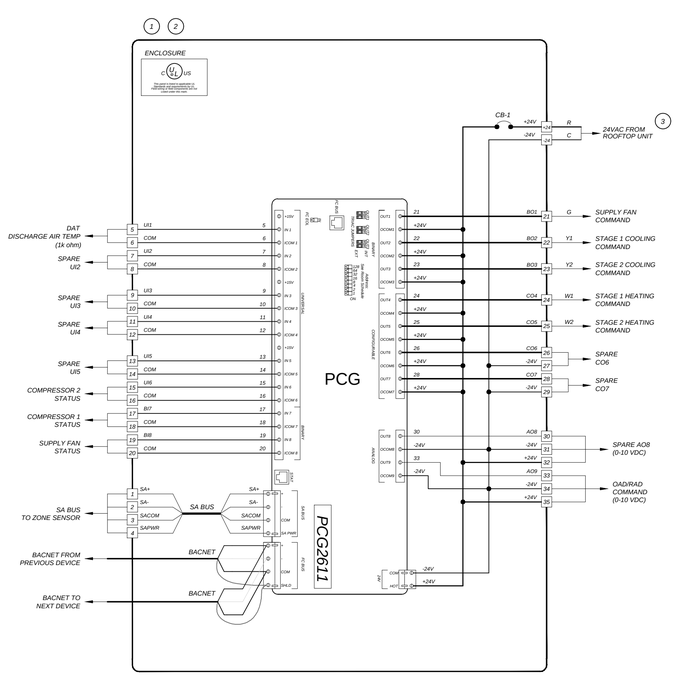

NOTE: ALL WIRES INSIDE OF PANEL TO BE LABELED AS SHOWN WITH HEAT SHRINK MARKERS ON TERMINATING ENDS OF WIRE.

Panel Components	
TAG	DESCRIPTION
PCG	GENERNAL PROGRAMMABLE CONTROLLER
ENC	NEMA 4 ENCLOSURE
ENC	BACKPLATE ENCLOSURE
ENC	PANEL LOCK KIT
CB-1	2.0 AMP CIRCUIT BREAKER

Detail Notes	
1	CONTROL PANEL FABRICATED BY TOTAL CONTROL CONTACT DEVEN PUTNAM 559-291-1000
2	PANEL SHALL BE UL LISTED
3	LINE VOLTAGE & CONDUIT BY DIVISION 16.

ROOF TOP UNIT TCP SCHEMATIC DETAIL

D / M-7

Package Unit

A thermostat shall be mounted in the space.

Occupied Cool Setpoint: 75°F (adjustable)

Occupied Heat Setpoint: 68°F (adjustable)

Warm/Cool Adjustment: +3°/-3°

Unoccupied Mode: The unit shall remain OFF in unoccupied mode.

Occupied Mode: The unit shall receive an occupied command from the Johnson FX Supervisory controller. The supply fan will be enabled. A current sensor on the supply fan shall prove supply fan run status. When the run status is proven ON, the following modes shall be allowed to happen.

Cooling Mode: When outside air is above the OA cooling lockout setpoint (65° F adjustable) and there is a call for cooling, the compressor shall stage on in order to satisfy the condition. Compressor shall be monitored with a current sensor to prove that the compressor is running.

Heating Mode: When outside air is below the OA heating lockout setpoint (60° F adjustable) and there is a call for heating the reversing valve shall stage on in order to satisfy the condition.

Demand Control Ventilation: CO2 readings shall come from the wall mount Temp/CO2 sensor. If the zone CO2 PPM reaches 800 ppm (adj.), the economizer shall modulate open to the maximum outdoor air position to satisfy the demand. Once the CO2 level drops below 800 ppm (adj.) , the economizer shall close to the minimum outdoor air position.

CO2 Monitoring: If CO2 in the space rises above CO2 alarm setpoint (adj.), the system will generate a Niagara alarm.

APPROVALS:

APPLICATION # ??????????

REGISTERED PROFESSIONAL ENGINEER — MICHAEL D. CURTIS — M23685 — REN. 9-30-2021 — MECHANICAL — STATE OF CALIFORNIA

DATE: 11-25-2020

EMS REPLACEMENT
ROWELL ELEMENTARY SCHOOL
3460 EAST McKENZIE AVE. FRESNO, CA 93702

FRESNO UNIFIED SCHOOL DISTRICT
4600 N. BRAWLEY AVE. FRESNO, CA.

REVISIONS

LAWRENCE ENGINEERING GROUP
7084 N. Maple Ave., Suite 101
Fresno, CA 93720
(559) 431-1001
FAX (559) 431-1082

TITLE: ENERGY MANAGEMENT DETAILS

SHEET: M7

PROJECT 20139

17 March 2021 7:53 AM P:\2020\20139 FUSD Rowell Elementary School\4-Drawings\4 M\M7 - CONTROLS.dwg ezequiel

Control Components	
TAG	DESCRIPTION
DAT,MAT,RAT	DUCT TEMP SENSOR
CCS,SFCS	CURRENT SENSOR
NZS	NETWORK ZONE SENSOR WITH CO_2
OAD/RAD	SPRING RETURN DAMPER ACTUATOR
BSP	PRESSURE TRANSDUCER

Sheet Notes

1. LINE VOLTAGE & CONDUIT BY DIVISION 16.
2. OAT GLOBALLY SHARED SOFTWARE POINT
3. CONTROL COMPONENTS PROVIDED BY TOTAL CONTROL CONTACT DEVEN PUTNAM AT 559-291-1000.
4. SEE DETAIL B/M-8 FOR TCP DIAGRAM.

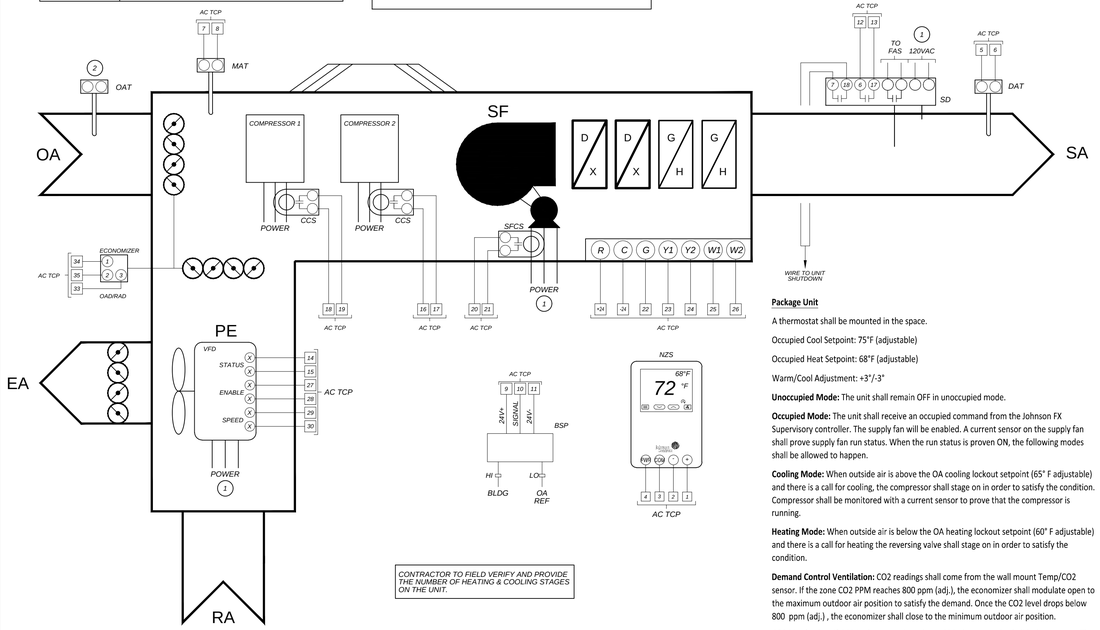

Package Unit

A thermostat shall be mounted in the space.

Occupied Cool Setpoint: 75°F (adjustable)

Occupied Heat Setpoint: 68°F (adjustable)

Warm/Cool Adjustment: +3°/-3°

Unoccupied Mode: The unit shall remain OFF in unoccupied mode.

Occupied Mode: The unit shall receive an occupied command from the Johnson FX Supervisory controller. The supply fan will be enabled. A current sensor on the supply fan shall prove supply fan run status. When the run status is proven ON, the following modes shall be allowed to happen.

Cooling Mode: When outside air is above the OA cooling lockout setpoint (65° F adjustable) and there is a call for cooling, the compressor shall stage on in order to satisfy the condition. Compressor shall be monitored with a current sensor to prove that the compressor is running.

Heating Mode: When outside air is below the OA heating lockout setpoint (60° F adjustable) and there is a call for heating the reversing valve shall stage on in order to satisfy the condition.

Demand Control Ventilation: CO2 readings shall come from the wall mount Temp/CO2 sensor. If the zone CO2 PPM reaches 800 ppm (adj.), the economizer shall modulate open to the maximum outdoor air position to satisfy the demand. Once the CO2 level drops below 800 ppm (adj.) , the economizer shall close to the minimum outdoor air position.

CO2 Monitoring: If CO2 in the space rises above CO2 alarm setpoint (adj.), the system will generate a Niagara alarm.

Control Components	
TAG	DESCRIPTION
DAT,MAT,RAT	DUCT TEMP SENSOR
OAD/RAD	SPRING RETURN DAMPER ACTUATOR
NZS	NETWORK ZONE SESNOR W/ CO_2

Detail Notes

1. LINE VOLTAGE & CONDUIT BY DIVISION 16.
2. OAT GLOBALLY SHARED SOFTWARE POINT
3. CONTROL COMPONENTS PROVIDED BY TOTAL CONTROL CONTACT DEVEN PUTNAM AT 559-291-1000.
4. SEE DETAIL D/M-8 FOR TCP DIAGRAM.

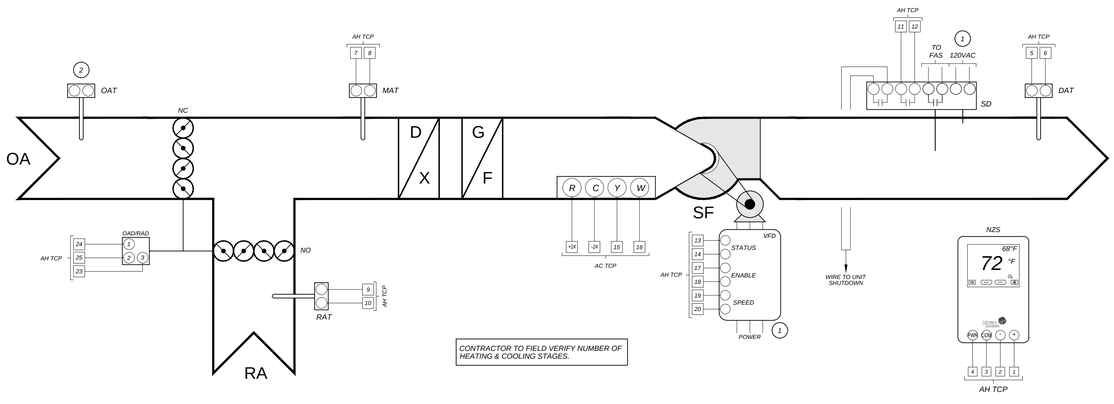

ROOF TOP UNIT CONTROL

A M-8

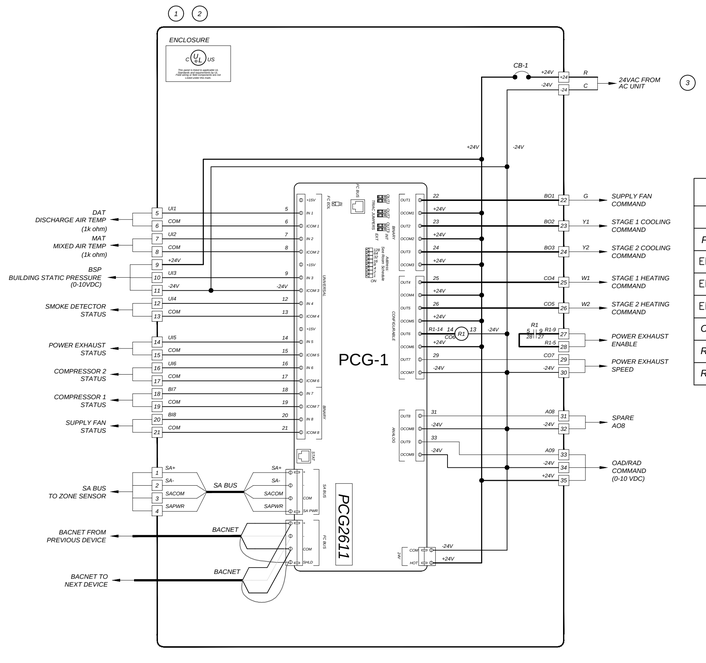

ROOF TOP UNIT TCP SCHEMATIC

HC-2

B M-8

NOTE: ALL WIRES INSIDE OF PANEL TO BE LABELED AS SHOWN WITH HEAT SHRINK MARKERS ON TERMINATING ENDS OF WIRE.

Panel Components	
TAG	DESCRIPTION
PCG	GENERNAL PROGRAMMABLE CONTROLLER
ENC	NEMA 4 ENCLOSURE
ENC	BACKPLATE ENCLOSURE
ENC	PANEL LOCK KIT
CB-1	2.0 AMP CIRCUIT BREAKER
R1	2-POLE 24VAC RELAY W/ LED
R1	2-POLE RELAY BASE

Sheet Notes

1. CONTROL PANEL FABRICATED BY TOTAL CONTROL CONTACT DEVEN PUTNAM AT 559-291-1000
2. PANEL SHALL BE UL LISTED
3. LINE VOLTAGE & CONDUIT BY DIVISION 16.

AIR HANDLER CONTROL DETAIL

C M-8

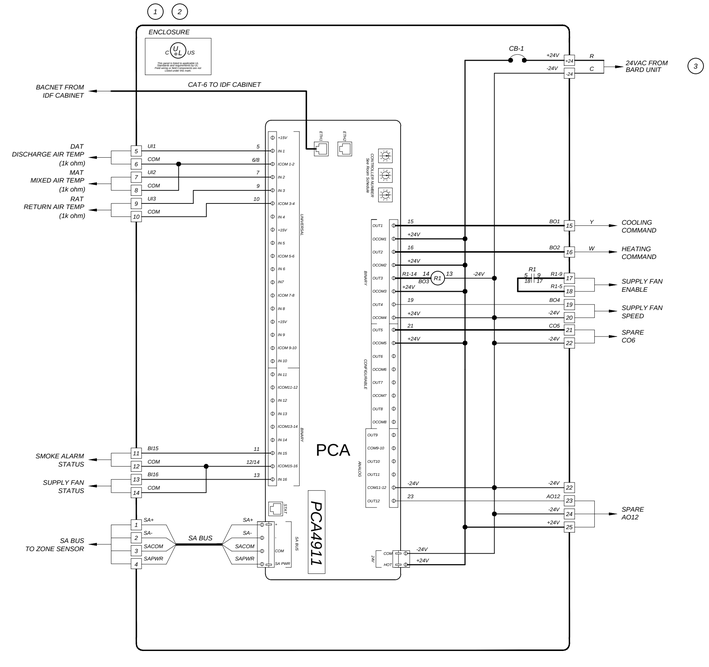

AIR HANDLER TCP SCHEMATIC DETAIL

D M-8

NOTE: ALL WIRES INSIDE OF PANEL TO BE LABELED AS SHOWN WITH HEAT SHRINK MARKERS ON TERMINATING ENDS OF WIRE.

Panel Components	
TAG	DESCRIPTION
PCA	ADVANCED PROGRAMMABLE CONTROLLER
ENC	NEMA 4 ENCLOSURE
ENC	BACKPLATE ENCLOSURE
ENC	PANEL LOCK KIT
CB-1	MANUAL RESET 2.0 AMP CIRCUIT BREAKER
R1	2-POLE 24VAC RELAY W/ LED
R1	2-POLE RELAY BASE

Detail Notes

1. CONTROL PANEL FABRICATED BY TOTAL CONTROL CONTACT DEVEN PUTNAM AT 559-291-1000.
2. PANEL SHALL BE UL LISTED
3. LINE VOLTAGE & CONDUIT BY DIVISION 16.

APPROVALS:

APPLICATION # ??????????

REGISTERED PROFESSIONAL ENGINEER — MITCHEL D. CHRISTY — M23688 — RENEWAL 9-30-2021 — MECHANICAL — STATE OF CALIFORNIA

DATE: 11-25-2020

EMS REPLACEMENT
ROWELL ELEMENTARY SCHOOL
3460 EAST McKENZIE AVE. FRESNO, CA 93702

FRESNO UNIFIED SCHOOL DISTRICT
4600 N. BRAWLEY AVE. FRESNO, CA.

REVISIONS

LAWRENCE ENGINEERING GROUP
Fresno, CA 93720
FAX (559) 431-1082
7084 N. Maple Ave., Suite 101
(559) 431-9101

TITLE: ENERGY MANAGEMENT DETAILS

SHEET: M8

PROJECT 20139

17 March 2021 7:53 AM P:\2020\20139 FUSD Rowell Elementary School\4-Drawings\4 M\M8 – CONTROLS.dwg ezequiel

Control Components	
TAG	DESCRIPTION
DAT	DUCT TEMP SENSOR
SFCS,CCS	CURRENT SENSOR
NZS	NETWORK ZONE SENSOR WITH CO2
OAD	DAMPER ACTUATOR

Sheet Notes

1. LINE VOLTAGE & CONDUIT BY DIVISION 16.
2. CONTROL COMPONENTS PROVIDED BY TOTAL CONTROL CONTACT DEVEN PUTNAM AT 559-291-1000
3. SEE DETAIL B/M-9 FOR TCP DIAGRAM.

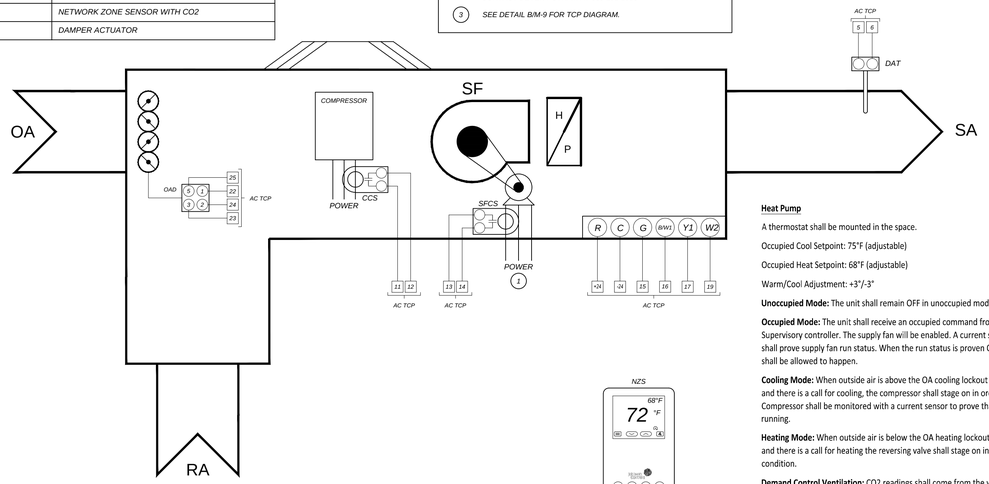

Heat Pump

A thermostat shall be mounted in the space.

Occupied Cool Setpoint: 75°F (adjustable)

Occupied Heat Setpoint: 68°F (adjustable)

Warm/Cool Adjustment: +3°/-3°

Unoccupied Mode: The unit shall remain OFF in unoccupied mode.

Occupied Mode: The unit shall receive an occupied command from the Johnson FX Supervisory controller. The supply fan will be enabled. A current sensor on the supply fan shall prove supply fan run status. When the run status is proven ON, the following modes shall be allowed to happen.

Cooling Mode: When outside air is above the OA cooling lockout setpoint (65° F adjustable) and there is a call for cooling, the compressor shall stage on in order to satisfy the condition. Compressor shall be monitored with a current sensor to prove that the compressor is running.

Heating Mode: When outside air is below the OA heating lockout setpoint (60° F adjustable) and there is a call for heating the reversing valve shall stage on in order to satisfy the condition.

Demand Control Ventilation: CO2 readings shall come from the wall mount Temp/CO2 sensor. If the zone CO2 PPM reaches 800 ppm (adj.), the economizer shall modulate open to the maximum outdoor air position to satisfy the demand. Once the CO2 level drops below 800 ppm (adj.) , the economizer shall close to the minimum outdoor air position.

CO2 Monitoring: If CO2 in the space rises above CO2 alarm setpoint (adj.), the system will generate a Niagara alarm.

WALL MOUNTED HEAT PUMP UNIT CONTROL DETAIL

A / M-9

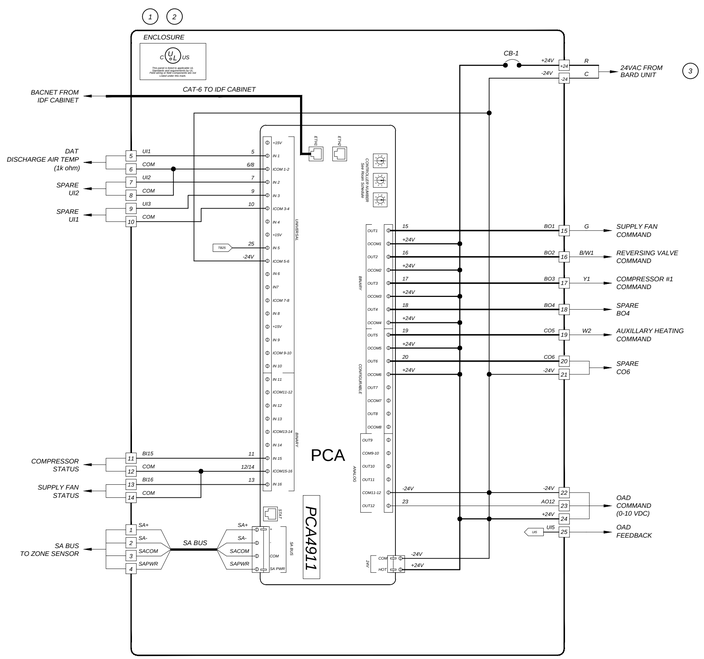

NOTE: ALL WIRES INSIDE OF PANEL TO BE LABELED AS SHOWN WITH HEAT SHRINK MARKERS ON TERMINATING ENDS OF WIRE.

Panel Components	
TAG	DESCRIPTION
PCA	ADVANCED PROGRAMMABLE CONTROLLER
CB-1	MANUAL RESET 2.0 AMP CIRCUIT BREAKER
ENC	NEMA 4 ENCLOSURE
ENC	BACKPLATE ENCLOSURE
ENC	PANEL LOCK KIT
TCP	TCP LABEL

Sheet Notes

1. CONTROL PANEL FABRICATED BY TOTAL CONTROL CONTACT DEVEN PUTNAM AT 559-291-1000.
2. PANEL SHALL BE UL LISTED
3. LINE VOLTAGE & CONDUIT BY DIVISION 16.

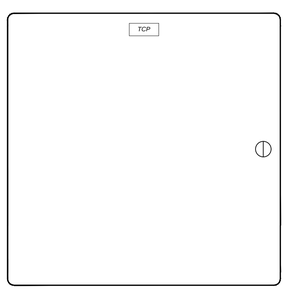

PANEL DOOR LAYOUT

WALL MOUNTED HEAT PUMP TCP SCHEMATIC DETAIL

B / M-9

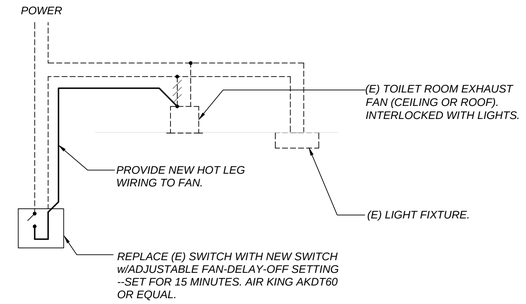

LIGHT / EXHAUST TIMER SWITCH

SCALE: NONE

C / M-9

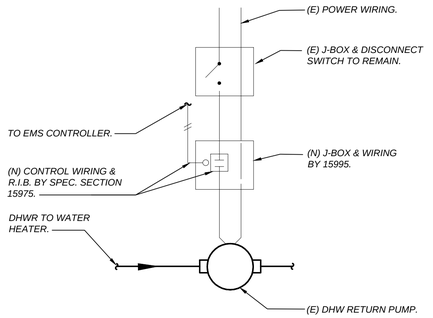

DOMESTIC H.W.R. PUMP CONTROL

SCALE: NONE

D / M-9

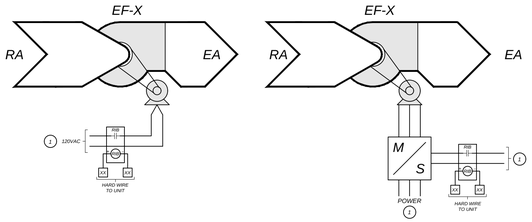

EXHAUST FAN INTERLOCK CONTROL

SCALE: NONE

E / M-9

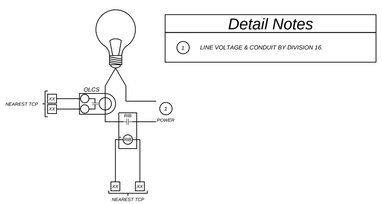

EXTERIOR LIGHTING CONTROL DETAIL

SCALE: NONE

F / M-9

APPROVALS:

APPLICATION # ??????????

REGISTERED PROFESSIONAL ENGINEER — MICHAEL D. CROSBY — M23585 — RENEWAL 9-30-2021 — MECHANICAL — STATE OF CALIFORNIA

DATE: 11-25-2020

EMS REPLACEMENT
ROWELL ELEMENTARY SCHOOL
3460 EAST McKENZIE AVE. FRESNO, CA 93702

FRESNO UNIFIED SCHOOL DISTRICT
4600 N. BRAWLEY AVE. FRESNO, CA.

REVISIONS

LAWRENCE ENGINEERING GROUP
Fresno, CA 93720
FAX (559) 431 3582
7084 N. Maple Ave., Suite 101
(559) 431 0101

TITLE: ENERGY MANAGEMENT DETAILS

SHEET: M9

PROJECT 20139

17 March 2021 7:53 AM P:\2020\20139 FUSD Rowell Elementary School\4-Drawings\4 M\M9 – CONTROLS.dwg ezequiel

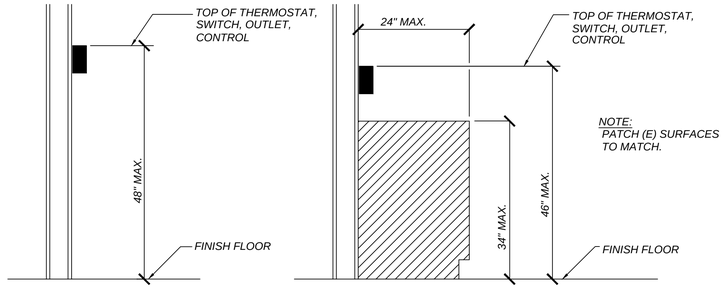

MOUNTING HEIGHT OVER OBSTRUCTION

THERMOSTAT MOUNTING

SCALE: NONE

A
M-10

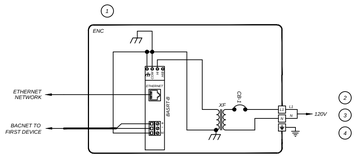

Router Panel Components

TAG	DESCRIPTION
CB-1	2.0 AMP CIRCUIT BREAKER
BASRT-B	BACNET/IP MS/TP ROUTER
XF	50A 24VAC TRANSFORMER
ENC	12X12 NEMA 1 ENCLOSURE WITH BACKPLATE

Detail Notes

1. CONTROL PANEL FABRICATED BY TOTAL CONTROL CONTACT DEVEN PUTNAM AT 559-291-1000.
2. LINE VOLTAGE & CONDUIT BY DIVISION 16.
3. FOR PORTABLE BLDG, PROVIDE AND INSTALL A DEDICATED 20A/1P CIRCUIT BREAKER TO THE PORTABLE BUILDING PANEL.
4. FOR PERMANENT BLDG, CONNECT ROUTER TO (E) CIRCUIT.

BACNET/IP MS/TP ROUTER PANEL DETAIL

SCALE: NONE

B
M-10

APPROVALS:

APPLICATION #
??????????

DATE: 11-25-2020

EMS REPLACEMENT
ROWELL ELEMENTARY SCHOOL
3460 EAST McKENZIE AVE. FRESNO, CA 93702

FRESNO UNIFIED SCHOOL DISTRICT
4600 N. BRAWLEY AVE. FRESNO, CA.

REVISIONS

LAWRENCE
ENGINEERING GROUP
7084 N. Maple Ave., Suite 101
(559) 431-0101
Fresno, CA 93720
FAX (559) 431-1362

TITLE:
ENERGY
MANAGEMENT
DETAILS

SHEET:
M10

PROJECT 20139

17 March 2021 7:53 AM P:\2020\20139 FUSD Rowell Elementary School\4-Drawings\4 M\M10 - CONTROLS.dwg ezequiel

GENERAL ELECTRICAL NOTES:

1. ALL WORK SHALL MEET THE LATEST ADOPTED ADDITIONS OF THE CALIFORNIA CODE OF REGULATIONS, TITLE 24 AND ALL OTHER APPLICABLE REGULATIONS, WHICH INCLUDE:

CALIFORNIA BUILDING CODE	2019
CALIFORNIA ELECTRICAL CODE	2019
NON RESIDENTIAL CEC ENERGY STANDARDS	2019

   NOTHING IN THE PLANS OR SPECIFICATIONS IS TO BE CONSTRUED TO PERMIT WORK NOT CONFORMING TO THESE CODES.

2. IT IS THE INTENTION OF THESE PLANS AND SPECIFICATIONS TO COVER EVERYTHING REQUIRED TO PROVIDE FOR COMPLETE AND OPERATIVE SYSTEMS. THE CONTRACTOR IS TO FURNISH LABOR, MATERIAL, TRANSPORTATION, EQUIPMENT, MISCELLANEOUS SERVICES, ETC. REQUIRED TO ACCOMPLISH THIS RESULT. ANYTHING WHICH MAY BE REASONABLY CONSTRUED AS A NECESSARY PART OF THE INSTALLATION IS TO BE INCLUDED, WHETHER OR NOT SPECIFICALLY SHOWN OR MENTIONED.

3. THE CONTRACTOR SHALL EXAMINE THE SITE AND EXISTING CONDITIONS AND MAKE ALLOWANCES IN THE BID FOR ANY CONDITIONS NOT SHOWN ON THE ELECTRICAL DOCUMENTS.

4. ELECTRICAL ROUTING IS DIAGRAMMATIC ONLY. ACTUAL ROUTING & PHYSICAL CONDITIONS MAY VARY. THE CONTRACTOR IS RESPONSIBLE FOR DETERMINING THE ACTUAL ROUTING, CONNECTIONS, & PROVISION OF ALL APPURTENANCES NECESSARY FOR A COMPLETE & OPERATING SYSTEM.

5. ELECTRICAL EQUIPMENT SHALL HAVE AN APPROVED TESTING LABORATORY LABEL ATTACHED (UL, CSA ETC.) PER CEC 110.2.

6. PROVIDE LABELING AND DIRECTORIES FOR ALL SWITCHBOARDS AND PANELBOARDS PER CEC 408.4.

7. ELECTRICAL EQUIPMENT SHALL HAVE A SHORT CIRCUIT CURRENT RATING CAPABLE OF WITHSTANDING THE AVAILABLE SHORT CIRCUIT CURRENT PER CEC 110.9.

8. PROVIDE MINIMUM 30" WIDE x 78" HIGH x 36" DEEP [42" DEEP] WORK CLEARANCES IN FRONT OF PANELS, SERVICE OR EQUIPMENT RATED AT 120/208V 3Ø 4W [277/480V 3Ø 4W] PER CEC 110.26.

9. WIRING FOR 120/208V AND 277/480V SYSTEMS SHALL BE MIN. #12 AWG THHN/THWN-2 COPPER.

10. ALL CONDUCTORS ROUTED ON ROOFS EXPOSED TO SUNLIGHT SHALL BE XHHW-2.

11. FEEDERS SIZE #4 AND LARGER SHALL BE MEGGER TESTED. TEST RESULTS SHALL BE SUBMITTED TO THE ENGINEER.

12. ALL CONDUITS SHALL HAVE MINIMUM 36" COVER. INSTALL GALVANIZED RIGID STEEL RISERS & ELBOWS WHERE RISERS OCCUR. WRAP GRS BELOW GRADE OR PROVIDE PVC COATED GRS. EXPOSED CONDUIT SHALL BE GRS TO 8'-0", THEN EMT ABOVE AS APPROPRIATE. UNDER NO CIRCUMSTANCE SHALL PVC CONDUIT BE INSTALLED ABOVE GRADE.

13. CONDUIT INSTALLED ABOVE GRADE SHALL BE MIN. 3/4" TRADE SIZE. CONDUIT BELOW GRADE SHALL BE MIN. 1" TRADE SIZE.

14. ALL FLEXIBLE CONDUITS SHALL BE NO LONGER THAN 36" AND SHALL ONLY BE USED AT THE MOTOR END. SEE DETAILS 1/E-3, 2/E-3, 3/E-3 AND 4/E-3.

ELECT. EQUIPMENT ANCHORAGE NOTES:

ALL ELECTRICAL COMPONENTS SHALL BE ANCHORED AND INSTALLED PER THE DETAILS ON THE DSA APPROVED CONSTRUCTION DOCUMENTS. WHERE NO DETAIL IS INDICATED, THE FOLLOWING COMPONENTS SHALL BE ANCHORED OR BRACED TO MEET THE FORCE AND DISPLACEMENT REQUIREMENTS PRESCRIBED IN THE 2019 CBC, SECTIONS 1617A.1.18 THROUGH 1617A.1.26 AND ASCE 7-16, CHAPTERS 13, 26 AND 30:

1. ALL PERMANENT EQUIPMENT AND COMPONENTS.
2. TEMPORARY, MOVABLE OR MOBILE EQUIPMENT THAT IS PERMANENTLY ATTACHED (E.G. HARD WIRED) TO THE BUILDING ELECTRICAL UTILITY SERVICE. "PERMANENTLY ATTACHED" SHALL INCLUDE ALL ELECTRICAL CONNECTIONS EXCEPT PLUGS FOR 120/220 VOLT RECEPTACLES HAVING A FLEXIBLE CABLE.
3. TEMPORARY, MOVABLE OR MOBILE EQUIPMENT WHICH IS HEAVIER THAN 400 POUNDS OR HAS A CENTER OF MASS LOCATED 4 FEET OR MORE ABOVE THE ADJACENT FLOOR OR ROOF LEVEL THAT DIRECTLY SUPPORT THE COMPONENT IS REQUIRED TO BE RESTRAINED IN A MANNER APPROVED BY DSA.

THE FOLLOWING ELECTRICAL COMPONENTS SHALL BE POSITIVELY ATTACHED TO THE STRUCTURE BUT NEED NOT DEMONSTRATE DESIGN COMPLIANCE WITH THE REFERENCES NOTED ABOVE. THESE COMPONENTS SHALL HAVE FLEXIBLE CONNECTIONS PROVIDED BETWEEN THE COMPONENT AND ASSOCIATED CONDUIT. FLEXIBLE CONNECTIONS MUST ALLOW MOVEMENT IN BOTH TRANSVERSE AND LONGITUDINAL DIRECTIONS:

A. COMPONENTS WEIGHING LESS THAN 400 POUNDS AND HAVE A CENTER OF MASS LOCATED 4 FEET OR LESS ABOVE THE ADJACENT FLOOR OR ROOF LEVEL THAT DIRECTLY SUPPORT THE COMPONENT.
B. COMPONENTS WEIGHING LESS THAN 20 POUNDS, OR IN THE CASE OF DISTRIBUTED SYSTEMS, LESS THAN 5 POUNDS PER FOOT, WHICH ARE SUSPENDED FROM A ROOF OR FLOOR OR HUNG FROM A WALL.

THE ANCHORAGE OF ALL ELECTRICAL COMPONENTS SHALL BE SUBJECT TO THE APPROVAL OF THE DESIGN PROFESSIONAL IN GENERAL RESPONSIBLE CHARGE OR STRUCTURAL ENGINEER DELEGATED RESPONSIBILITY AND ACCEPTANCE BY DSA. THE PROJECT INSPECTOR WILL VERIFY THAT ALL COMPONENTS AND EQUIPMENT HAVE BEEN ANCHORED IN ACCORDANCE WITH THE ABOVE REQUIREMENTS.

ELECT. DISTRIBUTION SYSTEM BRACING NOTES:

THE ELECTRICAL DISTRIBUTION SYSTEM SHALL BE BRACED TO COMPLY WITH THE FORCES AND DISPLACEMENTS PRESCRIBED IN ASCE 7-16, SECTION 13.3 AS DEFINED IN ASCE 7-16, SECTIONS 13.6.5, 13.6.6, 13.6.7, 13.6.8, AND 2019 CBC, SECTIONS 1617A.1.24, 1617A.1.25, AND 1617A.1.26.

THE METHOD OF SHOWING BRACING AND ATTACHMENTS TO THE STRUCTURE FOR THE IDENTIFIED DISTRIBUTION SYSTEM SYSTEM ARE AS NOTED BELOW. WHEN BRACING AND ATTACHMENTS ARE BASED ON A PREAPPROVED INSTALLATION GUIDE (E.G., OSHPD OPM FOR 2013 CBC OR LATER), COPIES OF THE BRACING SYSTEM INSTALLATION GUIDE OR MANUAL SHALL BE AVAILABLE ON THE JOBSITE PRIOR TO THE START OF AND DURING THE HANGING AND BRACING OF THE DISTRIBUTION SYSTEMS. THE STRUCTURAL ENGINEER OF RECORD SHALL VERIFY THE ADEQUACY OF THE STRUCTURE TO SUPPORT THE HANGER AND BRACE LOADS.

THE ELECTRICAL DISTRIBUTION SYSTEM IS DETAILED ON THE APPROVED DRAWINGS WITH SPECIFIC NOTES AND DETAILS. WHEN A DETAIL IS NOT PROVIDED ON THE PLANS, THE ELECTRICAL DISTRIBUTION SYSTEM SHALL COMPLY WITH OSHPD PRE-APPROVAL #OPM-0052-13 (B-LINE).

ELECTRICAL SYMBOLS:

	WEATHERPROOF, G.F.I. PROTECTED DUPLEX RECEPTACLE, WALL MOUNTED +15" TO BOTTOM OF BOX, UNLESS OTHERWISE NOTED
	WEATHERPROOF, G.F.I. PROTECTED DUPLEX RECEPTACLE, WALL MOUNTED +15" TO BOTTOM OF BOX, UNLESS OTHERWISE NOTED
	JUNCTION BOX
	MOTOR CONNECTION AND FUSIBLE DISCONNECT SWITCH, FUSE AS REQUIRED, NEMA 3R FOR OUTDOOR
	VARIABLE FREQUENCY DRIVE
	FVNR MOTOR STARTER
	POWER DISTRIBUTION BOARD OR WIRE GUTTER AS NOTED
T	TRANSFORMER
	WIRES IN CONDUIT, CONCEALED IN OR UNDER FLOOR
	WIRES IN CONDUIT, CONCEALED IN WALL OR CEILING
A-2	HOMERUN OF CONDUIT AND WIRING, CIRCUIT NO. 2 TO PANEL 'A'
	CROSS HATCHES INDICATE NUMBER OF #12 AWG. CONDUCTORS IN CONDUIT, WHEN MORE THAN TWO. WIRE SIZE INDICATED ON PLANS WHEN OTHER #12 AWG. PROVIDE GROUND PER CEC 250. (LARGE HATCHES ARE NEUTRAL CONDUCTORS, SMALL HATCHES ARE HOT OR SWITCH-LEG CONDUCTORS, CURVED HATCHES ARE 0-10V PURPLE & GREY CONDUCTORS)
SURFACE / FLUSH	PANELBOARD
(E)	EXISTING
(N)	NEW
(R)	REPLACE
(D)	DEMOLISH
W.P.	WEATHERPROOF
U.O.N.	UNLESS OTHERWISE NOTED

Hardin-Davidson Engineering
356 Pollasky Ave., Suite 200
Clovis, CA 93612
559.323.4995 tel - 559.323.4928 fax

REGISTERED PROFESSIONAL ENGINEER R. J. HARDIN No. 9125 ELECTRICAL STATE OF CALIFORNIA

APPROVALS:

APPLICATION # ??????????

REGISTERED PROFESSIONAL ENGINEER MICHAEL D. CANTEMI M23588 REN. 9-30-2021 MECHANICAL STATE OF CALIFORNIA

DATE: 11-25-2020

EMS REPLACEMENT
ROWELL ELEMENTARY SCHOOL
3460 EAST McKENZIE AVE. FRESNO, CA 93702

FRESNO UNIFIED SCHOOL DISTRICT
4600 N. BRAWLEY AVE. FRESNO, CA.

REVISIONS

LAWRENCE ENGINEERING GROUP
7094 N. Maple Ave., Suite 101
Fresno, CA 93720
(559) 431-1001
FAX (559) 431-1302

TITLE:
ELECTRICAL
SYMBOLS & NOTES

SHEET: 1 OF 2

E-1

PROJECT 20139

17 March 2021 10:55 AM Z:\Clients\Lawrence Engineering Group\21031 - Rowell ES EMS\CAD Files\21031 - Electcad.dwg patrick moy

MOTOR REPLACEMENT SCHEDULE				
UNIT	MOTOR	OLD MOTOR SIZE (HP)	NEW MOTOR SIZE (HP)	WIRE REQUIRED
MZ-1	SUPPLY	7.5	10	3#12
MZ-1	EXHAUST	5	7.5	3#14
MZ-2	SUPPLY	10	15	3#10
MZ-2	EXHAUST	5	7.5	3#14
MZ-3	SUPPLY	10	15	3#10
MZ-3	EXHAUST	5	7.5	3#14
MZ-4	SUPPLY	7.5	10	3#12
MZ-4	EXHAUST	1.5	2	3#14

UNIT MCA REQUIREMENTS				
UNIT	EXIST. MCA	NEW MCA	MOCP	FEEDER WIRE REQUIRED
MZ-1	79	85.4	100	1-1/4"C. - 3#2, 1#8 GRD.
MZ-2	83	93.4	100	1-1/4"C. - 3#2, 1#8 GRD.
MZ-3	83	93.4	100	1-1/4"C. - 3#2, 1#8 GRD.
MZ-4	83	86.4	100	1-1/4"C. - 3#2, 1#8 GRD.

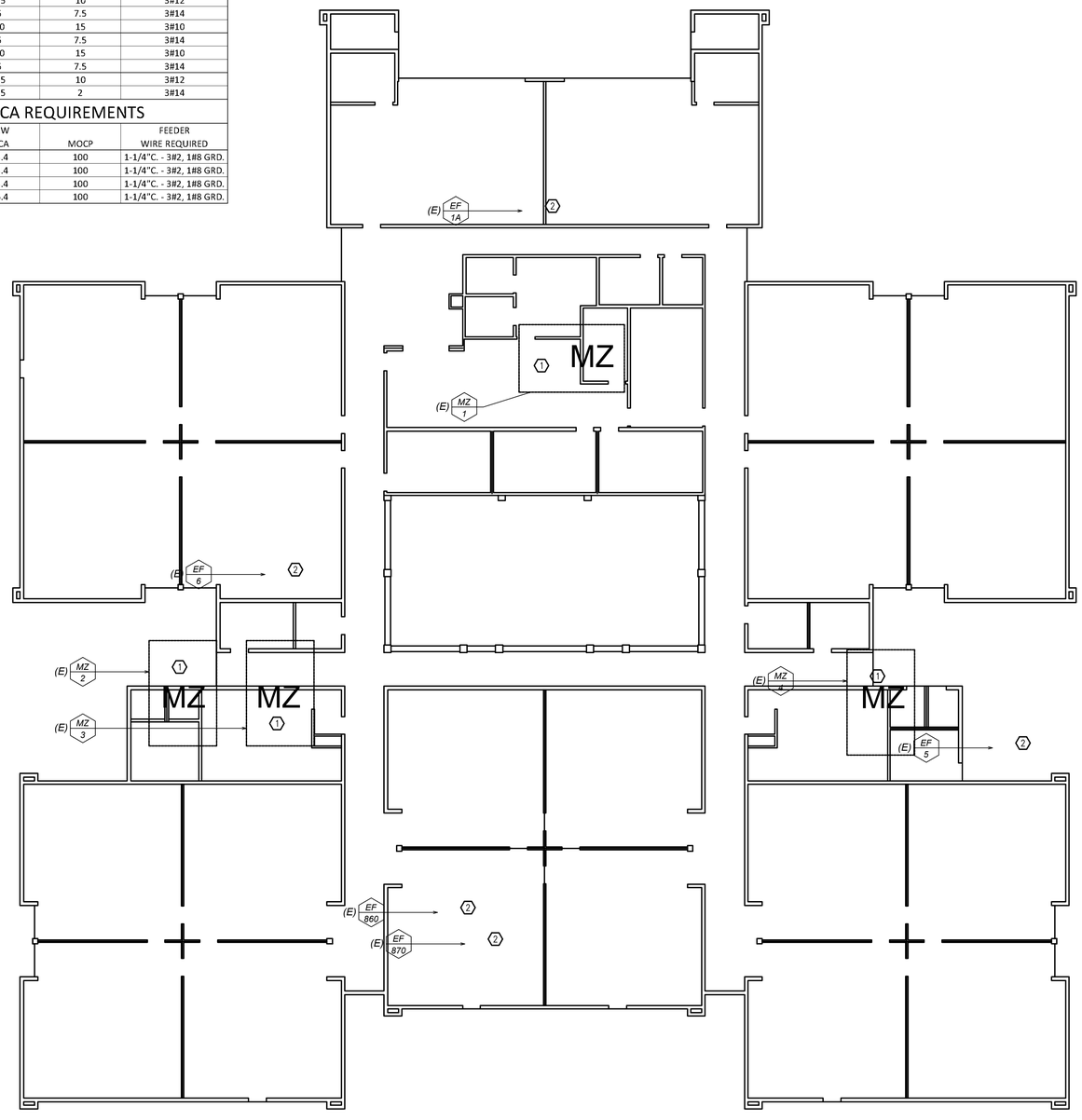

DRAWING KEY NOTES: (#)

1. DISCONNECT EXISTING FAN MOTORS AND STARTERS IN AC UNIT. REMOVE EXISTING FVNR MOTOR STARTER. INSTALL AND CONNECT NEW VFDS AS REQUIRED WITH ALL NEW WIRING AND PROVIDE FUSING AS REQUIRED BY VFD MANUFACTURER. CONNECT NEW MOTOR PER MOTOR REPLACEMENT SCHEDULE, THIS SHEET. PROVIDE NEW 100A, 480V, 3 POLE, NEMA 3R RATED FUSED DISCONNECT SWITCH WITH FUSES (DUAL ELEMENT, TIME DELAY. CONTRACTOR SHALL ALLOW FOR UP TO 100A FUSES.). REPLACE ANY EXISTING LIQUID-TITE FLEXIBLE CONDUIT WITH NEW (MAXIMUM LENGTH OF 36" PER DISTRICT STANDARD). PROVIDE NEW UPGRADED FEEDER WIRING PER UNIT MCA REQUIREMENT CHART, THIS SHEET. CONTRACTOR IS TO VISIT THE JOBSITE AND OBSERVE THE EXISTING CONDITIONS. IF THE EXISTING FEEDER RUNS ACROSS THE ROOF, THE CONTRACTOR SHALL DERATE THE FEEDER AS REQUIRED BY C.E.C. FOR ROOFTOP INSTALLATIONS.
2. DISCONNECT AND RECONNECT EXISTING EXHAUST FAN AS REQUIRED FOR INSTALLATION OF NEW MOTORS AND/OR CONTROLS. COORDINATE WITH MECHANICAL AND CONTROLS CONTRACTORS AS REQUIRED.

BLDG. A - LIBRARY MEDIA / CLASSROOMS

SCALE: 1/32" = 1'-0"

Hardin-Davidson Engineering
356 Pollasky Ave., Suite 200
Clovis, CA 93612
559.323.4995 tel - 559.323.4928 fax

REGISTERED PROFESSIONAL ENGINEER R. J. HARDIN No. 9125 ELECTRICAL STATE OF CALIFORNIA

APPROVALS:

APPLICATION # ??????????

REGISTERED PROFESSIONAL ENGINEER MICHAEL D. CANTERAY M23588 REN. 9-30-2021 MECHANICAL STATE OF CALIFORNIA

DATE: 11-25-2020

EMS REPLACEMENT
ROWELL ELEMENTARY SCHOOL
3460 EAST McKENZIE AVE. FRESNO, CA 93702

FRESNO UNIFIED SCHOOL DISTRICT
4600 N. BRAWLEY AVE. FRESNO, CA.

REVISIONS

LAWRENCE ENGINEERING GROUP
7084 N. Maple Ave., Suite 101
Fresno, CA 93720
(559) 431-0101
FAX (559) 431-1302

TITLE:
BLDG. A CLASSROOM
ELECTRICAL
PLAN

SHEET: 2 OF 2

E-2

PROJECT 20139

17 March 2021 10:55 AM Z:\Clients\Lawrence Engineering Group\21031 - Rowell ES EMS\CAD Files\21031 - Electrical.dwg patrick moy